TABLE OF CONTENTS

Why CLAMPSEAL® Valves are Top Performers in Their Class 3
A Wide Conval Product Line 4
Exploded View of CLAMPSEAL® Valve 5
The Most Advanced Forged Steel Valve Available 6
Conval Packing System 7
Y-Globe Stop, Check and Stop Check Valves ....8 & 9
T-Pattern Stop, Check and Stop Check Valves ....10 & 11
Angle Stop, Check and Stop Check Valves ....12 & 13
Throttling Valve ....14 & 15
CAMSEAL Ball Valves ....16 & 17
CLAMPSEAL Swivldisc Gate Valve ....18 & 19
Conval CLAMPSEAL® Valve ....20 & 21
Strainers 22
Whisperjets 23
Bonnetless, B16.34 Process Valve 24
Bellows Seal Valve 25
Special Applications Valves 26
CLAMPSEAL® Extended End Valve & Clamp Connecter Ends 27
Actuators 28
Service Tool Cross Reference 29
Conval Tool Kit 30
Standard Parts & Material List 31
Figure Number Description 32
Pressure/Temperature Charts ....33 - 36
ASME Class and Ratings 37
Applications 38

常州原见能源科技有限公司
oriseen.cn

Why CLAMPSEAL® Valves are Top Performers in Their Class

Versatility

CLAMPSEAL® valves are tailored to the exact requirements of our customers. No other premium forged valve offers so many options. Conval provides three body styles in various pressure classes and three standard materials. Other materials are available to meet customer needs. The easy interchangeability of parts means that an entire plant installation can be supported with a very low parts inventory.

Performance

Our customers demand a valve that does the job well with little attention. The CLAMPSEAL® valve is that valve. Over 40 years of service in the most demanding applications have established the CLAMPSEAL® valve as the top performer in its class and the easiest to service.

Valve-Quality

The cost of plant shutdown time to repair or replace valves far exceeds the cost of equipment. Features such as electroless nickel plated finish and complete material traceability of all wetted parts and yoke instantly establish the quality of the CLAMPSEAL® valve. In fact, parts for valves built 40 years ago are interchangeable with parts built today.

Service

The CLAMPSEAL® valve is only part of the service program which attends to the continued needs of our valued customers. Conval representatives and regional managers are selected and trained to provide the necessary support to assure complete satisfaction. Seminars are available at your plant at no cost.

Two-Year Warranty

Conval is committed to unsurpassed quality. We are so confident of the quality of our product, that we offer a two-year warranty.

常州原见能源科技有限公司
oriseen.cn

A Wide Conval Product Line

Standard Sizes

1/2" through 3" (4" reduced port)

Pressure Ratings(ASME)

Nominal: 900/1500/2500/4500

Intermediate: 1195/2155/3045

Blowdown / Letdown Valves

Five styles include single orifice continuous blowdown, unit tandem blowdown, Whisperjet blowdown, dual range valve for greater turndown and variable trim for fine control. Valves suitable for steam drains or any high pressure letdown service.

Gate Valves

Unique Swivldisc floating surface wedge gate for positive seat tightness. Anti-galling gate guiding, pressure seal bonnet, one piece gland with integral gland wrench.

Strainers

Simple and rugged with wide range of strainer element hole sizes. Socket blowoff connection or integral blowoff valve option available on all sizes.

Optional Valves

Adaptable to many on-line serviceable variations, including 3-way service, cryogenic service, bellows stem seal or leakoff features.

Standard Accessories

Actuators - electric, pneumatic or hydraulic
Locking Device - open, closed, or both
Limit Switch - single or dual
Stem Shroud
Position Indicator

Globe, Piston Check and Stop Check valves, Y, Angle and T pattern body styles all feature forged body and yoke; pressure seal bonnets with integral backseat and cartridge packing chambers; one piece packing gland with integral gland wrench; solid Stellite™ seat and disc/piston; and Electroless Nickel plate finish on Carbon Steel and Low Alloy valves.

End Prep

Type	Standard	Special
Sockets Weld	1/2" - 2"	2 1/2"
Butt Weld	2 1/2" - 4"	1/2" - 2"
Threaded	1/2" - 1"	1 1/2" - 2"
Clamp	1/2" - 3"	4"
Flanges		All Sizes

Materials (Body and Yoke)

Type	Standard	Special
Carbon Steel	SA 105 WCB (Gate Valve)	A350-LF2
Low Alloy	S182-F22 WC9 (Gate Valve) SA182-F91 C12A (Gate Valve)	SA182-F5 SA182-F11
Stainless	SA182-F316 SA182-F316L CF8M (Gate Valve)	SA182-F347
Other		Monel™ 400 Inconel™ 600

常州原见能源科技有限公司
oriseen.cn

Exploded View of CLAMPSEAL® Valve

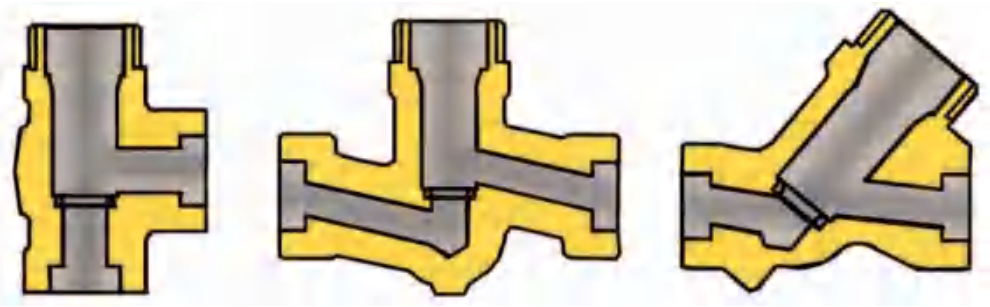

VALVES WITH SIZE CODE 8, 9 or 10
HAVE HANDWHEEL & ADAPTOR (IMPACT HANDWHEEL)

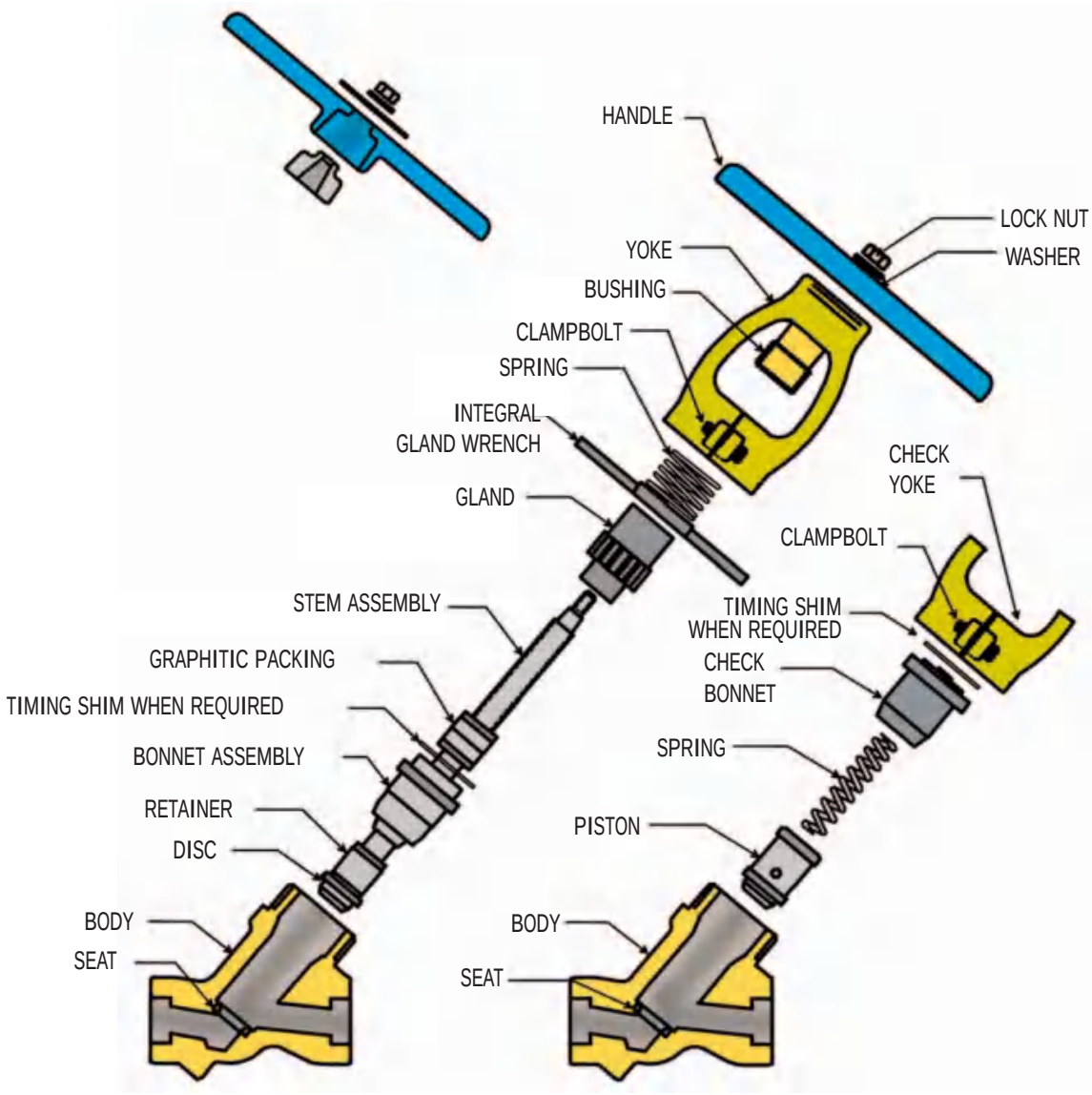

The Most Advanced Forged Steel Valve Available

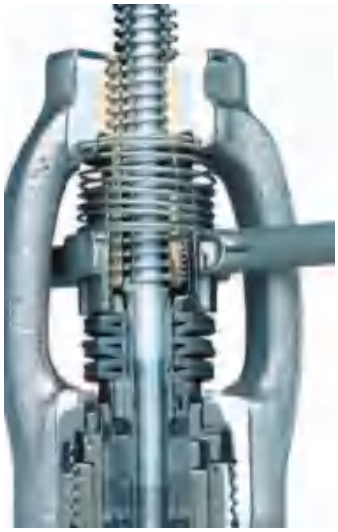

Axial Design

The axial design of CLAMPSEAL® valves ensures tight concentricity. This feature is critical for superior valve performance. Concentricity eliminates side loading of the packing and minimizes wear forces on the trim components.

High Performance Packing System

The CLAMPSEAL® packing system incorporates corrosion-inhibited, high density graphitic packing. An optional LIVE LOADED GLAND system maintains packing loads for long periods without routine maintenance adjustments. Uniform loading from the axial one-piece gland and the highly polished stainless steel stem and stuffing box ensure a tight seal between packing material and sealing surfaces.

Integral Gland Wrench – I.G.W.

The Integral Gland Wrench makes packing adjustments simple, no tools required.

Clampseal® Bonnet/Chamber

A secure, leak proof bonnet allows rapid access to valve trim for inspection and maintenance. The pressure boundary is sealed at the smallest diameter possible to ensure maximum strength, low stress and minimum weight.

Pressure Actuated Backseat

The pressure actuated backseat provides maximum valve integrity by ensuring a positive internal stop for the valve stem and disc assembly while extending packing life by securely isolating the packing from line pressure when the valve is fully open.

Modular Body Styles

Three interchangeable body styles, Y, ANGLE and T-PATTERN use identical replacement trim parts to lessen your tool and inventory costs. Solid cobalt alloy seats provide high erosion resistance and repeatable in-line resurfacing (Cobalt free alloys are also available).

Rapid In-Line Repairability

The CLAMPSEAL® Valve line provides a modular solution to rising maintenance expense. Rapid, reliable in-line repairs make for less down time. This feature cuts man hours and man-REM exposure in nuclear environments.

常州原见能源科技有限公司
oriseen.cn

Conval Packing System

The CLAMPSEAL® packing system utilizes proven, corrosion-inhibited, graphite packing. The packing is uniformly loaded with a one-piece gland. The stuffing box and stem are burnished stainless steel to ensure a tight seal between the system fluids and sealing surfaces.

The packing seal in any valve is inherently vulnerable. Normal packing shrinkage, frictional and pressure forces, and improper or neglected adjustment all contribute to packing deterioration. In an effort to maximize packing life, several innovative features have been incorporated in the CLAMPSEAL® design.

- **Single Piece Gland** insures uniform packing compression and eliminates the potential for stem damage from gland cocking.
- **Surface Finishes and Close Tolerances** of stem and chamber provide optimal sealing surfaces and minimize wear.
- **Narrow Packing Rings** reduce the effect of packing shrinkage, thereby reducing the frequency of packing gland adjustment. Since force = pressure x area (F = P x A), by keeping the packing area to a minimum, there is less force being exerted by the system fluid, making it easier to contain.
- **Integral Gland Wrench**, standard on all CLAMPSEAL® globe and gate valves, provides immediate gland/packing adjustment capability.
- **Pressure Seal Backseat** increases packing life and provides maximum valve integrity by ensuring a positive internal stop for the valve stem and disc assembly, securely isolating packing from line pressure when valve is fully open.
- **Cartridge Type Packing Chamber** with secure, leak-proof bonnet allows rapid access to valve trim for inspection and maintenance. Pressure boundary is sealed at the smallest diameter possible to ensure maximum strength and low stress.
- **Thermal Isolation** of the packing chamber increases packing life. The Stainless Steel packing chamber is a separate unit from the body and therefore, eliminates the need to remove or change packing after stress relieving.

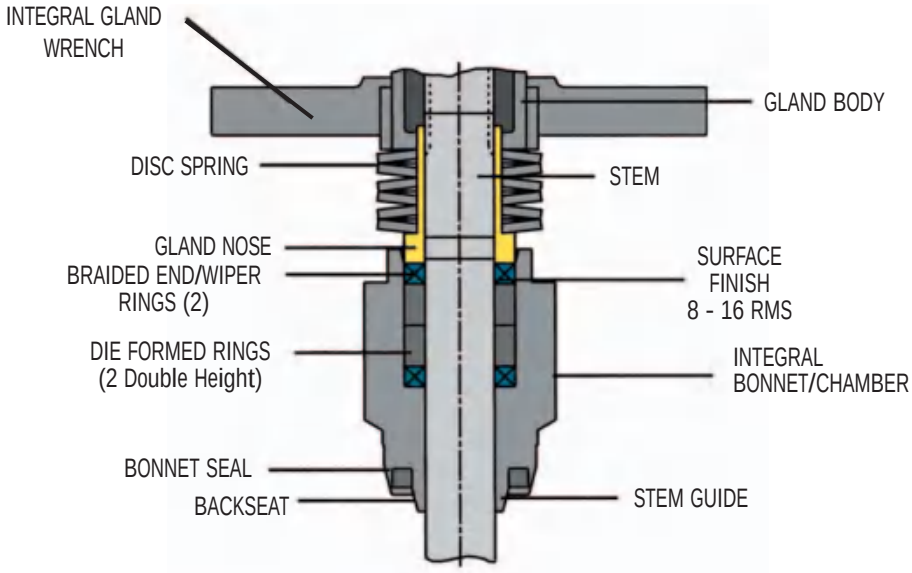

Optional Live Loaded Gland feature shown with the CLAMPSEAL® valve.

NOTE: TO ENSURE PROPER PACKING INTEGRITY, REFER TO CONVAL SERVICING INSTRUCTIONS FOR APPROPRIATE GLAND TORQUES BEFORE INSTALLING A REPAIRED VALVE IN-LINE.

常州原见能源科技有限公司
oriseen.cn

Y-Globe Stop, Check and Stop Check Valves

Y-pattern globe valves provide the maximum Cv possible in a globe valve. All Y-pattern valves are rodable. Available in 1/2" to 4"; ASME pressure classes through 4500; A105, F22, F91, F316, F347, Inconel™, Monel™ and other materials.

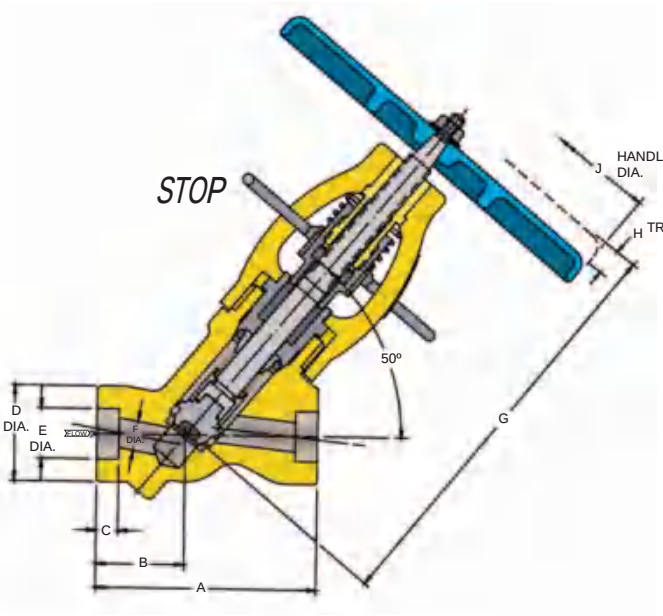

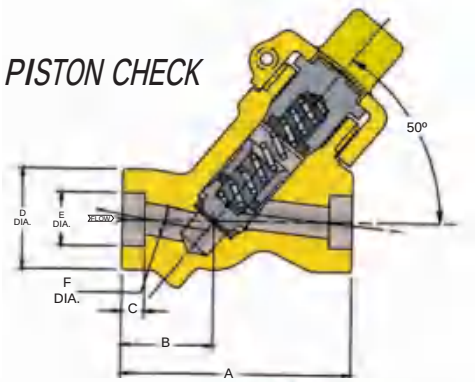

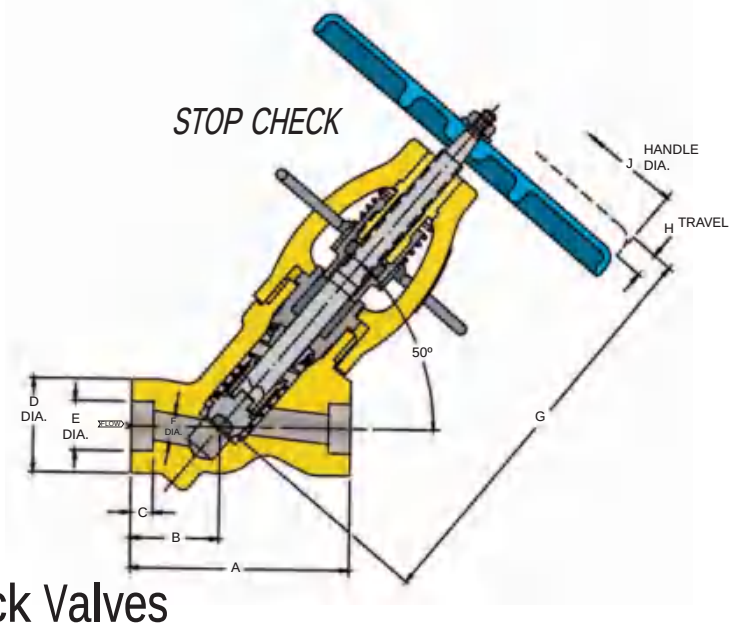

Y-Globe Stop, Check and Stop Check Valves

PRESSURE CLASS	Size Code	Pipe Size	A SW	A BW	B SW	B BW	C*	D	E*	F	G	H	J	Cv	Wgt
	3D	1/2	3 3/4	3 3/4	1 1/2	1 1/2	3/8	1 5/8	0.855	1/2	7 3/8	9/16	6 1/2	6	5
		15	95	95	40	40	10	41	22	15	187	14	165		2
	5E	3/4	4 1/2	4 3/4	1 3/4	1 3/4	1/2	2 5/16	1.065	5/8	8 13/16	11/16	8	10	11
		20	115	120	45	45	15	59	27	16	224	17	200		5
NOMINAL	5F	1	4 1/2	4 3/4	1 3/4	1 3/4	1/2	2 5/16	1.330	13/16	8 15/16	25/32	8	15	10
		25	115	120	45	45	15	59	34	21	227	20	200		5
900	5G	1 1/4	4 1/2	4 3/4	1 3/4	1 3/4	1/2	2 5/16	1.675	1	9 7/16	1 1/4	8	24	9
		32	115	120	45	45	15	59	43	25	240	32	200		4
	6H	1 1/2	5 1/2	6 1/8	2 1/8	2 7/16	1/2	2 11/16	1.915	1 1/4	9 13/16	1 3/16	8	36	14
		40	140	156	54	62	15	68	49	32	249	30	200		6
INTERMEDIATE	7J	2	6 1/4	6 1/2	2 9/16	2 9/16	5/8	3 1/4	2.406	1 1/2	12 7/8	1 1/4	12	61	21
		50	158	165	65	65	16	88	61	40	327	32	300		10
1155	8K	2 1/2	7 1/4	7 1/4	2 11/16	2 11/16	5/8	3 15/16	2.906	1 7/8	14 11/16	1 11/16	12	86	43
		65	184	184	68	68	16	100	74	48	373	43	300		20
	9L	3	-	9 5/8	-	3 5/8	-	4 3/8	-	2 1/4	16 13/16	2 7/32	14	122	65
		80	-	244	-	92	-	110	-	58	427	56	350		30
	10M	4	-	12	-	5 5/16	-	4 7/8	-	2 5/8	18 25/32	2 1/2	18	170	110
		100	-	300	-	135	-	124	-	67	477	65	450		50

* Socket Weld dimensions shown; Consult factory for Butt Weld dimensions.
Numbers shown in Black indicate dimensions in inches, weightin pounds. Numbers shown in blue indicate dimensions in mm, weights in kilograms.
Threaded end valves are nominal ASME B16.34 rated. Consult factory for other ratings.
NOTE: All weights are approximate for shipping purposes only. Information on Figure Number Variations can be found on page 32.

常州原见能源科技有限公司
oriseen.cn

PRESSURE CLASS	Size Code	Pipe Size	A SW	A BW	B SW	B BW	C*	D	E*	F	G	H	J	Cv	Wgt
	3D	1/2 15	3 3/4 95	3 3/4 95	1 1/2 40	1 1/2 40	3/8 10	1 5/8 41	0.855 22	1/2 15	7 3/8 187	9/16 14	6 1/2 165	6	5 2
	5E	3/4 20	4 1/2 115	4 3/4 120	1 3/4 45	1 3/4 45	1/2 15	2 5/16 59	1.065 27	5/8 16	8 13/16 224	11/16 17	8 200	10	11 5
NOMINAL	5F	1 25	4 1/2 115	4 3/4 120	1 3/4 45	1 3/4 45	1/2 15	2 5/16 59	1.330 34	13/16 21	9 227	25/32 20	8 200	15	10 5
1500	6G	1 1/4 32	5 1/2 140	6 1/8 156	2 1/8 54	2 7/16 62	1/2 15	2 11/16 68	1.675 43	1 25	9 13/16 249	1 3/16 30	8 200	24	15 7
	7H	1 1/2 40	6 1/4 158	6 1/2 165	2 9/16 65	2 9/16 65	1/2 15	3 1/4 88	1.915 49	1 1/4 32	12 3/4 320	1 3/16 30	12 300	38	22 10
INTERMEDIATE	8J	2 50	7 1/4 184	7 1/4 184	2 11/16 68	2 11/16 68	5/8 16	3 15/16 100	2.406 61	1 1/2 40	14 21/32 372	1 11/16 43	12 300	62	45 20
2155	9K	2 1/2 65	9 5/8 244	9 5/8 244	3 5/16 84	3 5/8 92	5/8 16	4 3/8 111	2.906 74	1 7/8 48	16 23/32 425	2 5/32 55	14 350	86	71 32
	10L	3 80	- -	12 300	- -	5 5/16 135	- -	4 7/8 124	- -	2 1/4 58	18 1/2 465	2 3/16 56	18 450	122	110 50
	10L	4 100	- -	12 300	- -	5 5/16 135	- -	4 7/8 124	- -	2 1/4 58	18 1/2 465	2 3/16 56	18 450	122	110 50
	3C	1/2 15	3 3/4 95	3 3/4 95	1 1/2 40	1 1/2 40	3/8 10	1 5/8 41	0.855 22	7/16 11	7 5/16 186	1/2 15	6 1/2 165	4	5 2
	5E	3/4 20	4 1/2 115	4 3/4 120	1 3/4 45	1 3/4 45	1/2 15	2 5/16 59	1.065 27	5/8 16	8 13/16 224	11/16 17	8 200	10	11 5
NOMINAL	5E	1 25	4 1/2 115	4 3/4 120	1 3/4 45	1 3/4 45	1/2 15	2 5/16 59	1.330 34	5/8 16	8 13/16 224	11/16 17	8 200	10	11 5
2500	7G	1 1/4 32	6 1/4 158	6 1/2 165	2 9/16 65	2 9/16 65	1/2 15	3 1/4 88	1.675 43	1 25	12 3/4 320	1 3/16 30	12 300	24	23 10
	7G	1 1/2 40	6 1/4 158	6 1/2 165	2 9/16 65	2 9/16 65	1/2 15	3 1/4 88	1.915 49	1 25	12 3/4 320	1 3/16 30	12 300	24	23 10
INTERMEDIATE	8H	2 50	7 1/4 184	7 1/4 184	2 11/16 68	2 11/16 68	5/8 16	3 15/16 100	2.406 61	1 1/4 32	14 1/4 358	1 5/16 33	12 300	38	47 21
3045	9J	2 1/2 65	-	9 5/8 244	- -	3 5/8 92	5/8 16	4 3/8 111	2.906 74	1 1/2 40	16 11/32 415	1 5/8 41	14 350	62	74 34
	10K	3 80	-	12 300	5 5/16 135	5 5/16 135	-	4 7/8 124	-	1 7/8 48	18 15/32 469	2 1/8 54	18 450	88	114 52
	10K	4 100	- -	12 300	5 5/16 135	5 5/16 135	- -	4 7/8 124	- -	1 7/8 48	18 15/32 469	2 1/8 54	18 450	88	114 52
	5D	1/2 15	4 1/2 115	4 3/4 120	1 3/4 45	1 3/4 45	3/8 10	2 5/16 59	0.855 22	1/2 15	8 11/16 221	5/8 16	6 1/2 165	6	10 5
	5D	3/4 20	4 1/2 115	2 5/16 59	1 3/4 45	1 3/4 45	1/2 15	2 5/16 59	1.065 27	1/2 15	8 11/16 221	5/8 16	6 1/2 165	6	10 5
NOMINAL	6E	1 25	5 1/2 140	6 1/8 156	2 1/8 54	2 7/16 62	1/2 15	2 11/16 68	1.330 34	5/8 16	9 15/16 252	11/16 17	8 200	10	16 7
3500	7F	1 1/4 32	6 1/4 158	6 1/2 165	2 9/16 65	2 9/16 65	1/2 15	3 1/4 88	1.675 43	13/16 21	12 15/32 317	7/8 22	12 300	16	24 11
	8G	1 1/2 40	7 1/4 184	7 1/4 184	2 11/16 68	2 11/16 68	1/2 15	3 15/16 100	1.915 49	1 25	14 7/32 361	1 3/16 30	12 300	24	50 23
INTERMEDIATE	8G	2 50	- -	7 1/4 184	- -	2 11/16 68	- -	3 15/16 100	- -	1 25	14 7/32 361	1 3/16 30	12 300	24	50 23
4095	9H	2 50	9 229	- -	3 5/16 84	- -	5/8 16	4 3/8 111	2.406 61	1 1/4 32	15 15/16 405	1 7/16 37	12 300	39	68 31
	9H	2 1/2 65	-	9 5/8 244	- -	3 5/8 92	- -	4 3/8 111	- -	1 1/4 32	15 15/16 405	1 7/16 37	12 300	39	68 31
	10J	3 80	-	12 300	-	5 5/16 135	-	4 7/8 124	-	1 1/2 40	18 5/32 461	1 13/16 46	14 350	62	112 51
	10J	4 100	- -	12 300	- -	5 5/16 135	- -	4 7/8 124	- -	1 1/2 40	18 5/32 461	1 15/16 49	14 350	62	112 51
	5C	1/2 15	4 1/2 115	4 3/4 120	1 3/4 45	1 3/4 45	3/8 10	2 5/16 59	0.855 22	7/16 11	8 3/4 222	11/16 17	6 1/2 165	4	12 5
	6E	3/4 20	5 1/2 140	6 1/8 156	2 1/8 54	2 7/16 62	1/2 15	2 11/16 68	1.065 27	5/8 16	9 5/16 237	11/16 17	8 200	10	16 7
	6E	1 25	-	6 1/8 156	-	2 7/16 62	-	2 11/16 68	-	5/8 16	9 5/16 237	11/16 17	8 200	10	16 7
NOMINAL	7E	1 25	6 1/4 158	-	2 9/16 65	-	1/2 15	3 1/4 83	1.330 34	5/8 16	12 1/8 308	7/8 22	8 200	10	25 11
4500	7E	1 1/2 40	-	6 1/2 165	-	2 9/16 65	-	3 1/4 83	-	5/8 16	12 1/8 308	7/8 22	12 300	10	25 11
	8F	1 1/2 40	7 1/4 184	-	2 11/16 68	-	1/2 15	3 15/16 100	-	13/16 21	13 9/16 344	1 25	12 300	16	38 17
	8F	2 50	-	7 1/4 184	-	2 11/16 68	-	3 15/16 100	-	13/16 21	13 9/16 344	1 25	12 300	16	38 17
	9G	2 1/2 65	-	9 5/8 244	-	3 5/8 92	-	4 3/8 111	-	1 25	15 13/16 402	1 3/8 35	12 300	24	67 30
	10H	3 80	-	12 300	-	5 5/16 135	-	4 7/8 124	-	1 1/4 32	17 3/4 451	1 7/16 37	12 300	39	110 50
	10H	4 100	- -	12 300	- -	5 5/16 135	- -	4 7/8 124	- -	1 1/4 32	17 3/4 451	1 7/16 37	12 300	39	110 50

T-Pattern Stop, Check and Stop Check Valves

T-pattern, vertical stem globe valves provide easily accessible stems and extentions for remote manual operation. Available in 1/2" to 3"; ASME pressure classes through 4095; A105, F22, F91, F316, F347, Inconel™, Monel™ and other materials.

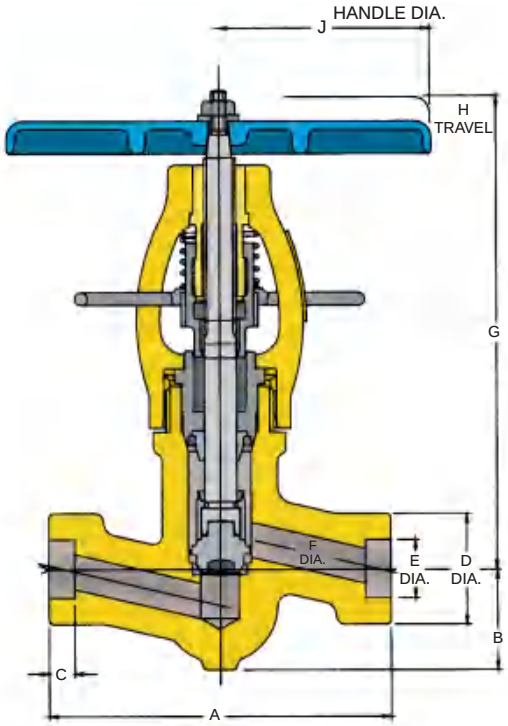

PRESSURE CLASS	Size Code	Pipe Size	A SW	A BW	B	C*	D	E*	F	G	H	J	Cv	Wgt
	3D	1/2	5	5	1 1/2	3/8	1 5/8	0.855	1/2	7 1/4	9/16	6 1/2	5	6
		15	125	125	40	10	41	22	15	184	14	165		3
	5E	3/4	6 1/2	6 1/2	1 7/8	1/2	2 3/8	1.065	5/8	8 13/16	11/16	8	8	13
NOMINAL		20	165	165	48	15	60	27	16	224	17	200		6
	5F	1	6 1/2	6 1/2	1 7/8	1/2	2 3/8	1.330	13/16	8 7/8	3/4	8	13	12
900		25	165	165	48	15	60	34	21	225	20	200		5
	7G	1 1/4	8 1/2	8 1/2	2 13/16	1/2	3 3/16	1.675	1	12 11/16	1 3/16	12	19	25
		32	215	215	71	15	81	43	25	322	30	300		11
	7H	1 1/2	8 1/2	8 1/2	2 13/16	1/2	3 3/16	1.915	1 1/4	12 11/16	1 3/16	12	30	24
INTERMEDIATE		40	215	215	71	15	81	49	32	322	30	300		11
	8J	2	10	10	3 3/4	5/8	3 7/8	2.406	1 1/2	15	1 5/8	12	51	55
1155		50	250	250	95	16	98	61	38	381	41	300		25
	8J	2 1/2	-	10	3 3/4	-	3 7/8	-	1 1/2	15	1 5/8	12	51	55
		65	-	250	95	-	98	-	40	381	41	300		25
	8J	3	-	10	3 3/4	-	3 7/8	-	1 1/2	15	1 5/8	12	51	55
		80	-	250	95	-	98	-	40	381	41	300		25
	3D	1/2	5	5	1 1/2	3/8	1 5/8	0.855	1/2	7 1/4	9/16	6 1/2	5	6
		15	127	127	40	10	41	22	15	184	14	165		3
	5E	3/4	6 1/2	6 1/2	1 7/8	1/2	2 3/8	1.065	5/8	8 13/16	11/16	8	8	13
		20	165	165	48	15	60	27	16	224	17	200		6
NOMINAL	5F	1	6 1/2	6 1/2	1 7/8	1/2	2 3/8	1.330	3/16	8 7/8	3/4	8	13	12
1500		25	165	165	48	15	60	34	21	225	20	200		5
	7G	1 1/4	8 1/2	8 1/2	2 13/16	1/2	3 3/16	1.675	1	12 11/16	1 3/16	12	19	25
		32	215	215	71	15	81	43	25	322	30	300		11
	7H	1 1/2	8 1/2	8 1/2	2 13/16	1/2	3 3/16	1.915	1 1/4	12 11/16	1 3/16	12	30	24
		40	215	215	71	15	81	49	32	322	30	300		11
INTERMEDIATE	8J	2	10	10	3 3/4	5/8	3 7/8	2.406	1 1/2	15	1 5/8	12	51	55
		50	250	250	95	16	98	61	40	381	41	300		25
2155	8J	2 1/2	-	10	3 3/4	-	3 7/8	-	1 1/2	15	1 5/8	12	51	55
		65	-	250	95	-	98	-	40	381	41	300		25
	8J	3	-	10	3 3/4	-	3 7/8	-	1 1/2	15	1 5/8	12	51	55
		80	-	250	95	-	98	-	40	381	41	300		25

* Socket Weld dimensions shown; Consult factory for Butt Weld dimensions.
Numbers shown in Black indicate dimensions in inches, weightin pounds. Numbers shown in blue indicate dimensions in mm, weights in kilograms.
Threaded end valves are nominal ASME B16.34 rated. Consult factory for other ratings.
NOTE: All weights are approximate for shipping purposes only. Information on Figure Number Variations can be found on page 32.

常州原见能源科技有限公司
oriseen.cn

PRESSURE CLASS	Size Code	Pipe Size	A SW	A BW	B	C*	D	E*	F	G	H	J	Cv	Wgt
	3C	1/2	5	5	1 1/2	3/8	1 5/8	0.855	7/16	7 3/16	1/2	6 1/2	4	7
		15	127	127	40	10	41	22	11	183	15	165		3
	5E	3/4	6 1/2	6 1/2	1 7/8	1/2	2 3/8	1.065	5/8	8 13/16	11/16	8	8	13
		20	165	165	48	15	60	27	16	224	17	200		6
NOMINAL	5E	1	6 1/2	6 1/2	1 7/8	1/2	2 3/8	1.330	5/8	8 13/16	11/16	8	8	13
		25	165	165	48	15	60	34	16	224	17	200		6
2500	7G	1 1/4	8 1/2	8 1/2	2 13/16	1/2	3 3/16	1.675	1	12 11/16	1 13/16	12	19	25
		32	215	215	71	15	81	43	25	322	21	300		11
	7G	1 1/2	8 1/2	8 1/2	2 13/16	1/2	3 3/16	1.915	1	12 11/16	1 13/16	12	19	25
		40	215	215	71	15	81	49	25	322	21	300		11
INTERMEDIATE	8H	2	10	10	3 3/4	5/8	3 7/8	2.406	1 1/4	14 5/8	1 1/4	12	30	55
		50	250	250	95	16	98	61	32	371	32	300		25
3045	8H	2 1/2	-	10	3 3/4	-	3 7/8	-	1 1/4	14 5/8	1 1/4	12	30	55
		65	-	250	95	-	98	-	32	371	32	300		25
	8H	3	-	10	3 3/4	-	3 7/8	-	1 1/4	14 5/8	1 1/4	12	30	55
		80	-	250	95	-	98	-	32	371	32	300		25
	5D	1/2	6 1/2	6 1/2	1 7/8	3/8	2 3/8	0.855	1/2	8 3/4	5/8	8	5	14
		15	165	165	48	10	60	22	15	220	16	200		6
	5D	3/4	6 1/2	6 1/2	1 7/8	1/2	2 3/8	1.065	1/2	8 3/4	5/8	8	5	14
		20	165	165	48	15	60	27	15	220	16	200		6
NOMINAL	7F	1	8 1/2	8 1/2	2 13/16	1/2	3 3/16	1.330	13/16	12 3/8	7/8	12	13	26
		25	215	215	71	15	81	34	21	314	22	300		12
3500	7F	1 1/4	-	8 1/2	2 13/16	-	3 3/16	-	13/16	12 3/8	7/8	12	13	26
		32	-	215	71	-	81	-	21	314	22	300		12
	7F	1 1/2	-	8 1/2	2 13/16	-	3 3/16	-	13/16	12 3/8	7/8	12	13	26
		40	-	215	71	-	81	-	21	314	22	300		12
INTERMEDIATE	8G	1 1/4	10	-	3 3/4	1/2	3 7/8	1.675	1	14 5/8	1 3/16	12	19	49
		32	250	-	95	15	98	43	25	371	30	300		22
4095	8G	1 1/2	10	-	3 3/4	1/2	3 7/8	1.915	1	14 5/8	1 3/16	12	19	49
		40	250	-	95	15	98	49	25	371	30	300		22
	8G	2	-	10	3 3/4	-	3 7/8	-	1	14 5/8	1 3/16	12	19	49
		50	-	250	95	-	98	-	25	371	30	300		22
	8G	2 1/2	-	10	3 3/4	-	3 7/8	-	1	14 5/8	1 3/16	12	19	49
		65	-	250	95	-	98	-	25	371	30	300		22
	8G	3	-	10	3 3/4	-	3 7/8	-	1	14 5/8	1 3/16	12	19	49
		80	-	250	95	-	98	-	25	371	30	300		22

* Socket Weld dimensions shown; Consult factory for Butt Weld dimensions.
Numbers shown in Black indicate dimensions in inches, weightin pounds. Numbers shown in blue indicate dimensions in mm, weights in kilograms.
Threaded end valves are nominal ASME B16.34 rated. Consult factory for other ratings.
NOTE: All weights are approximate for shipping purposes only. Information on Figure Number Variations can be found on page 32.

常州原见能源科技有限公司
oriseen.cn

Angle Stop, Check and Stop Check Valves

Angle pattern globe valves economically eliminate the need for separate valves and 90° joints. They also reduce the number of installation welds. Available in 1/2" to 4"; ASME pressure classes through 4095; A105, F22, F91, F316, F347, Inconel™, Monel™ and other materials.

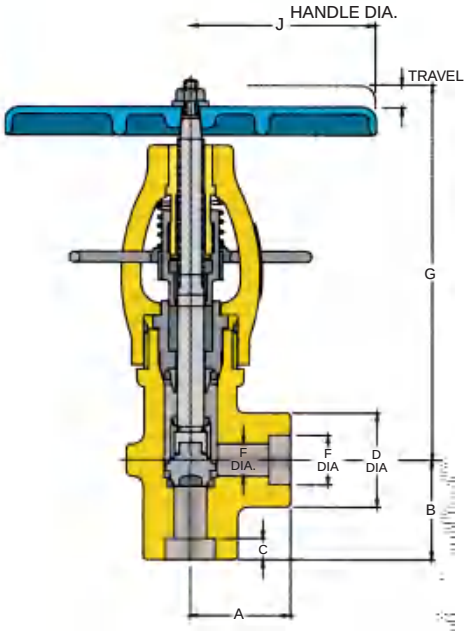

PRESSURE CLASS	Size Code	Pipe Size	A SW	A BW	B	C*	D	E*	F	G	H	J	Cv	Wgt
	3D	1/2 15	1 3/4 45	1 3/4 45	1 3/4 45	3/8 10	1 21/32 42	0.855 22	9/16 14	6 7/8 175	9/16 14	6 1/2 165	5	5 2
	5E	3/4 20	2 5/16 59	2 5/16 59	2 5/16 59	1/2 15	2 5/16 59	1.065 27	11/16 17	8 3/16 208	11/16 17	8 200	8	11 5
NOMINAL	5F	1 25	2 5/16 59	2 5/16 59	2 5/16 59	1/2 15	2 5/16 59	1.330 34	27/32 21	8 1/4 200	3/4 20	8 200	13	10 5
900	5G	1 1/4 32	2 5/16 59	2 5/16 59	2 5/16 59	1/2 15	2 5/16 59	1.675 43	1 1/16 27	8 1/4 200	3/4 20	8 200	20	9 4
	7H	1 1/2 40	2 3/4 70	2 3/4 70	4 1/4 108	1/2 15	3 1/4 80	1.915 49	1 9/32 33	11 7/8 302	1 3/16 30	12 300	30	21 10
INTERMEDIATE	7J	2 50	- -	2 3/4 70	4 1/4 108	- -	3 1/4 80	- -	1 9/16 40	12 1/8 311	1 1/4 32	12 300	46	20 9
1195	7J	2 1/2 65	- -	2 3/4 70	4 1/4 108	- -	3 1/4 80	- -	1 9/16 40	12 1/8 311	1 1/4 32	12 300	46	20 9
	8J	2 50	3 80	- -	4 1/2 115	5/8 16	3 15/16 100	2.406 61	1 9/16 40	14 350	2 41	12 300	46	42 19
	10M	2 1/2 65	5 125	- -	6 150	5/8 16	4 7/8 125	2.906 74	2 5/8 66	15 1/4 387	1 13/16 46	18 450	127	106 48
	10M	3 80	- -	5 125	6 150	- -	4 7/8 125	- -	2 5/8 66	15 1/4 387	1 13/16 46	18 450	127	106 48
	10M	4 100	- -	5 125	6 150	- -	4 7/8 125	- -	2 5/8 66	15 1/4 387	1 13/16 46	18 450	127	106 48
	3D	1/2 15	1 3/4 45	1 3/4 45	1 3/4 45	3/8 10	1 21/32 42	0.855 22	9/16 14	6 7/8 175	9/16 14	6 1/2 165	5	5 2
	5E	3/4 20	2 5/16 59	2 5/16 59	2 5/16 59	1/2 15	2 5/16 59	1.065 27	11/16 17	8 3/16 208	11/16 17	8 200	8	11 5
NOMINAL	5F	1 25	2 5/16 59	2 5/16 59	2 5/16 59	1/2 15	2 5/16 59	1.330 34	27/32 21	8 1/4 210	3/4 20	8 200	13	10 5
1500	7G	1 1/4 32	2 3/4 70	2 3/4 70	4 1/4 108	1/2 15	3 1/4 83	1.675 43	1 1/16 27	11 7/8 302	1 3/16 30	12 300	20	23 10
	7H	1 1/2 40	2 3/4 70	2 3/4 70	4 1/4 108	1/2 15	3 1/4 83	1.915 49	1 9/32 33	11 7/8 302	1 3/16 30	12 300	30	21 10
INTERMEDIATE	8J	2 50	3 80	3 80	4 1/2 114	5/8 16	3 15/16 100	2.406 61	1 9/16 40	14 350	1 5/8 41	12 300	46	42 19
2155	8J	2 1/2 65	- -	3 80	4 1/2 114	- -	3 15/16 100	- -	1 9/16 40	14 350	1 5/8 41	12 300	46	42 19
	10L	2 1/2 65	5 125	- -	6 150	5/8 16	4 7/8 124	2.906 74	2 1/4 57	15 1/4 387	1 13/16 46	18 450	91	107 49
	10L	3 80	- -	5 127	6 150	- -	4 7/8 124	- -	2 1/4 57	15 1/4 387	1 13/16 46	18 450	91	107 49
	10L	4 100	- -	5 125	6 150	- -	4 7/8 124		2 1/4 57	15 1/4 387	1 13/16 46	18 450	91	107 49

* Socket Weld dimensions shown; Consult factory for Butt Weld dimensions.
Numbers shown in Black indicate dimensions in inches, weightin pounds. Numbers shown in blue indicate dimensions in mm, weights in kilograms.
Threaded end valves are nominal ASME B16.34 rated. Consult factory for other ratings.
NOTE: All weights are approximate for shipping purposes only. Information on Figure Number Variations can be found on page 32.

常州原见能源科技有限公司
oriseen.cn

PRESSURE CLASS	Size Code	Pipe Size	A SW	A BW	B	C*	D	E*	F	G	H	J	Cv	Wgt
	3C	1/2	1 3/4	1 3/4	1 3/4	3/8	1 21/32	0.855	7/16	6 3/4	1/2	6 1/2	4	6
		15	44	44	44	10	42	22	11	171	15	165		3
	5E	3/4	2 5/16	2 5/16	2 5/16	1/2	2 5/16	1.065	11/16	8 3/16	11/16	8	8	11
		20	59	59	59	15	59	27	17	208	17	200		5
NOMINAL	5E	1	2 5/16	2 5/16	2 5/16	1/2	2 5/16	1.330	11/16	8 3/16	11/16	8	8	11
		25	59	59	59	15	59	34	17	208	17	200		5
2500	7G	1 1/4	2 3/4	2 3/4	4 1/4	1/2	3 1/4	1.675	1 1/16	11 7/8	1 3/16	12	20	23
		32	70	70	108	15	83	43	27	302	30	300		10
	7G	1 1/2	-	2 3/4	4 1/4	-	3 1/4	-	1 1/16	11 7/8	1 3/16	12	20	23
		40	-	70	108	-	83	-	27	302	30	300		10
INTERMEDIATE	8H	1 1/2	3	-	4 1/2	1/2	3 15/16	1.915	1 9/32	13 5/8	1 1/4	12	30	42
		40	80	-	115	15	100	49	33	346	32	300		19
3045	8H	2	3	3	4 1/2	5/8	3 15/16	2.406	1 9/32	13 5/8	1 1/4	12	30	42
		50	80	80	115	16	100	61	33	346	32	300		19
	8H	2 1/2	-	3	4 1/2	-	3 15/16	-	1 9/32	13 5/8	1 1/4	12	30	42
		65	-	80	115	-	100	-	33	346	32	300		19
	10K	2 1/2	5	-	6	5/8	4 7/8	2.906	1 7/8	15 1/4	1 13/16	18	65	108
		65	125	-	152	16	124	74	48	387	46	450		49
	10K	3	-	5	6	-	4 7/8	-	1 7/8	15 1/4	1 13/16	18	65	108
		80	-	125	152	-	124	-	48	387	46	450		49
	10K	4	-	5	6	-	4 7/8	-	1 7/8	15 1/4	1 13/16	18	65	108
		100	-	125	152	-	124	-	48	387	46	450		49
	5D	1/2	2 5/16	2 5/16	2 5/16	3/8	2 5/16	0.855	9/16	8 1/8	5/8	8	5	11
		15	59	59	59	10	59	22	14	206	16	200		5
	5D	3/4	2 5/16	2 5/16	2 5/16	1/2	2 5/16	1.065	9/16	8 1/8	5/8	8	5	11
		20	59	59	59	15	59	27	14	206	16	200		5
NOMINAL	7F	1	2 3/4	2 3/4	4 1/4	1/2	3 1/4	1.330	27/32	11 3/8	7/8	12	13	24
		25	70	70	115	15	88	34	21	289	22	300		11
3500	7F	1 1/4	-	2 3/4	4 1/4	-	3 1/4	-	27/32	11 3/8	7/8	12	13	24
		32	-	70	115	-	88	-	21	289	22	300		11
	8G	1 1/4	3	-	4 1/2	1/2	3 15/16	1.675	1 1/16	13 1/4	1 3/16	12	20	45
		32	80	-	115	15	100	43	27	337	30	300		20
	8G	1 1/2	3	3	4 1/2	1/2	3 15/16	1.915	1 1/16	13 1/4	1 3/16	12	20	45
		40	80	80	115	15	100	49	27	337	30	300		20
INTERMEDIATE	8G	2	-	3	4 1/2	-	3 15/16	-	1 1/16	13 1/4	1 3/16	12	20	45
		50	-	80	115	-	100	-	27	337	30	300		20
4095	8G	2 1/2	-	3	4 1/2	-	3 15/16	-	1 1/16	13 1/4	1 3/16	12	20	45
		65	-	80	115	-	100	-	27	337	30	300		20
	10J	2 1/2	5	-	6	5/8	4 7/8	2.906	1 9/16	15 1/4	1 13/16	14	50	103
		65	125	-	152	16	124	74	40	387	46	350		47
	10J	3	-	5	6	-	4 7/8	-	1 9/16	15 1/4	1 13/16	14	50	103
		80	-	125	152	-	124	-	40	387	46	350		47
	10J	4	-	5	6	-	4 7/8	-	1 9/16	15 1/4	1 13/16	14	50	103
		100	-	125	152	-	124	-	40	387	46	350		47

* Socket Weld dimensions shown; Consult factory for Butt Weld dimensions.
Numbers shown in Black indicate dimensions in inches, weightin pounds. Numbers shown in blue indicate dimensions in mm, weights in kilograms.
Threaded end valves are nominal ASME B16.34 rated. Consult factory for other ratings.
NOTE: All weights are approximate for shipping purposes only. Information on Figure Number Variations can be found on page 32.

常州原见能源科技有限公司
oriseen.cn

Throttling Valve

Pressure Class

Full ASME rated through 3045. Higher intermediate and limited class ratings are available. Consult factory.

Features

- Replaceable 440C SS Seat/Venturi
- Low Velocity Across the Main Seat
- Precise Flow Control
- Position Indicator
- Pressure Seal Bonnet
- Superior Control Micrometer Dial
- Ease of Actuation:
  Air Motor Hydraulic

To Specify

1.) Use "U" as the valve design modifier in the figure number. (e.g. 1.50-13U2J-F22)

2.) Indicate orifice size or inlet pressure and temperature and required maximum flow.

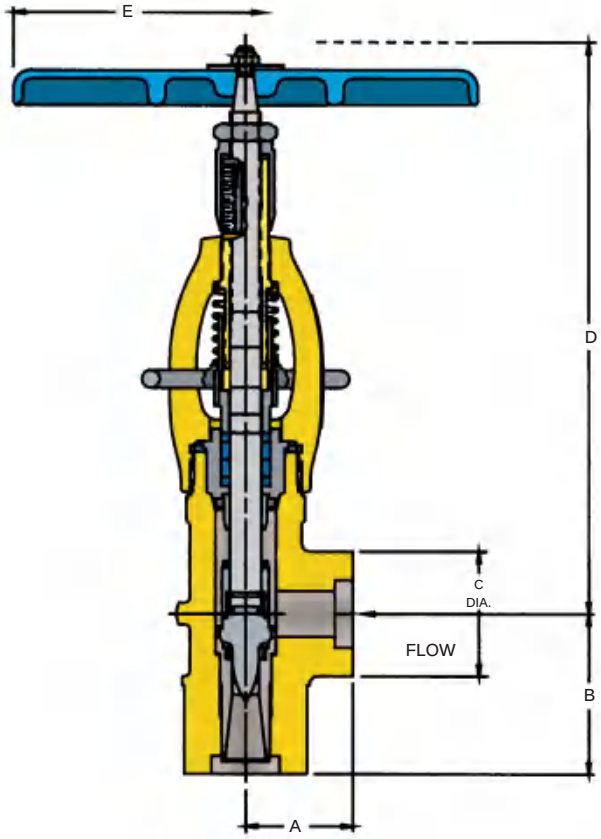

PRESSURE CLASS	Size Code	Pipe Size	A	B	C	D	E	Wgt
	5E	1/2 15	2 5/16 59	4 100	3 5/16 84	9 3/4 248	8 200	13 59
	5E	3/4 20	2 5/16 59	4 100	3 5/16 84	9 3/4 248	8 200	13 59
NOMINAL	5E	1 25	2 5/16 59	4 100	3 5/16 84	9 3/4 248	8 200	13 59
900	7G	1 25	2 3/4 70	4 1/4 108	3 1/4 88	13 3/8 340	12 300	26 118
	7G	1 1/4 32	2 3/4 70	4 1/4 108	3 1/4 88	13 3/8 340	12 300	26 118
INTERMEDIATE	7G	1 1/2 40	2 3/4 70	4 1/4 108	3 1/4 88	13 3/8 340	12 300	26 118
1155	7G	2 50	2 3/4 70	4 1/4 108	3 1/4 88	13 3/8 340	12 300	26 118
	8H	2 50	3 80	4 1/2 114	3 15/16 100	15 1/8 384	12 300	40 182
	8H	2 1/2 65	3 80	4 1/2 114	3 15/16 100	15 1/8 384	12 300	40 182
	10K	3 80	5 125	6 152	4 7/8 124	18 5/8 473	18 450	86 390
	10K	4 100	5 125	6 152	4 7/8 124	18 5/8 473	18 450	86 390
	5E	1/2 15	2 5/16 59	4 100	3 5/16 84	9 3/4 248	8 200	13 59
	5E	3/4 20	2 5/16 59	4 100	3 5/16 84	9 3/4 248	8 200	13 59
	5E	1 25	2 5/16 59	4 100	3 5/16 84	9 3/4 248	8 200	13 59
NOMINAL	7G	1 25	2 3/4 70	4 1/4 108	3 1/4 88	13 3/8 340	12 300	26 118
1500	7G	1 1/4 32	2 3/4 70	4 1/4 108	3 1/4 88	13 3/8 340	12 300	26 118
	8H	1 1/4 32	3 80	4 1/2 115	3 15/16 100	15 1/8 384	12 300	40 182
INTERMEDIATE	7G	1 1/2 40	2 3/4 70	4 1/4 108	3 1/4 88	13 3/8 340	12 300	26 118
2155	8H	1 1/2 40	3 80	4 1/2 115	4 7/8 124	15 1/8 384	12 300	40 182
	8H	2 50	3 80	4 1/2 115	4 7/8 124	15 1/8 384	12 300	40 182
	10K	2 1/2 65	5 125	6 152	4 7/8 124	18 5/8 473	18 450	86 390
	10K	3 80	5 125	6 152	4 7/8 124	18 5/8 473	18 450	86 390
	10K	4 100	5 125	6 152	4 7/8 124	18 5/8 473	18 450	86 390
	5E	1/2 15	2 5/16 59	4 100	3 5/16 84	9 3/4 248	8 200	13 59
	5E	3/4 20	2 5/16 59	4 100	3 5/16 84	9 3/4 248	8 200	13 59
NOMINAL	5E	1 25	2 5/16 59	4 100	3 5/16 84	9 3/4 248	8 200	13 59
2500	7G	1 1/4 32	2 3/4 70	4 1/4 108	3 1/4 88	13 3/8 340	12 300	26 118
	8H	1 1/4 32	3 80	4 1/2 115	3 15/16 100	15 1/8 384	12 300	40 182
INTERMEDIATE	7G	1 1/2 40	2 3/4 70	4 1/4 115	3 1/4 88	13 3/8 340	12 300	26 118
3045	8H	1 1/2 40	3 80	4 1/2 115	3 15/16 100	15 1/8 384	12 300	40 182
	8H	2 50	3 80	4 1/2 115	3 15/16 100	15 1/8 384	12 300	40 182
	10K	2 50	5 125	6 152	4 7/8 124	18 5/8 473	18 450	86 390
	10K	2 1/2 65	5 125	6 152	4 7/8 124	18 5/8 473	18 450	86 390
	10K	3 80	5 125	6 152	4 7/8 124	18 5/8 473	18 450	86 390

* Socket Weld dimensions shown; Consult factory for Butt Weld dimensions.
Numbers shown in Black indicate dimensions in inches, weightin pounds. Numbers shown in blue indicate dimensions in mm, weights in kilograms.
Butt Weld dimensions determined by pipe schedule.
NOTE: All weights are approximate for shipping purposes only. Information on Figure Number Variations can be found on page 32.

常州原见能源科技有限公司
oriseen.cn

Throttling Valve

TYPICAL FLOW CHART

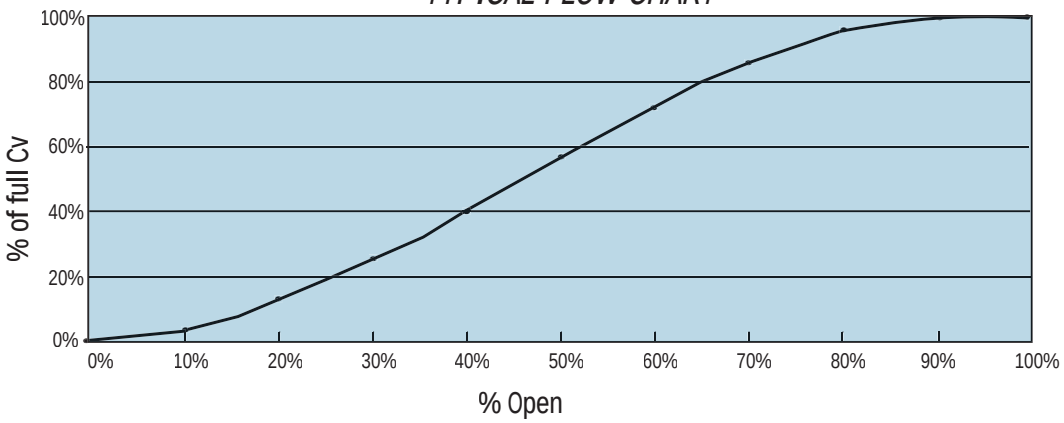

SPECIFICATIONS

Size Code Fig. No.	Pipe Size (Inches)	Cv Standard Orifice Size 1/8	3/16	1/4	5/16	3/8	7/16	1/2	9/16	5/8	11/16	3/4	13/16	7/8	15/16	1	Wt. (lbs.)
5E	1/2 3/4 1	0.3	0.6	1.1	-	-	-	-	-	-	-	-	-	-	-	-	12
7G	1 1 1/4 1 1/2 2	-	-	1.1	1.7	2.5	3.3	4.3	5	-	-	-	-	-	-	-	26
8H	1 1/4 1 1/2 2	-	-	-	-	-	3.5	4.6	6	7	9	10	-	-	-	-	40
10K	2 2 1/2 3 4	-	-	-	-	-	-	-	6	7	9	10	12	14	16	19	86

-Socket Weld Specifications Shown. Butt Weld Available. Other orifices available upon request.

Size Code Fig. No.	Pipe Size (mm)	Cv Standard Orifice Size 3	5	6	8	10	11	13	14	16	17	19	21	22	24	25	Wt. (kg.)
5E	13 19 25	0.3	0.6	1.1	-	-	-	-	-	-	-	-	-	-	-	-	5.4
7G	25 32 38 51	-	-	1.1	1.7	2.5	3.3	4.3	5	-	-	-	-	-	-	-	11.8
8H	32 38 51	-	-	-	-	-	3.3	4.6	6	7	9	10	-	-	-	-	18.2
10K	51 64 76 102	-	-	-	-	-	-	-	6	7	9	10	12	14	16	19	39.0

Conval Camseal™ Ball Valves are designed for the world's most demanding high-pressure, high-temperature applications.

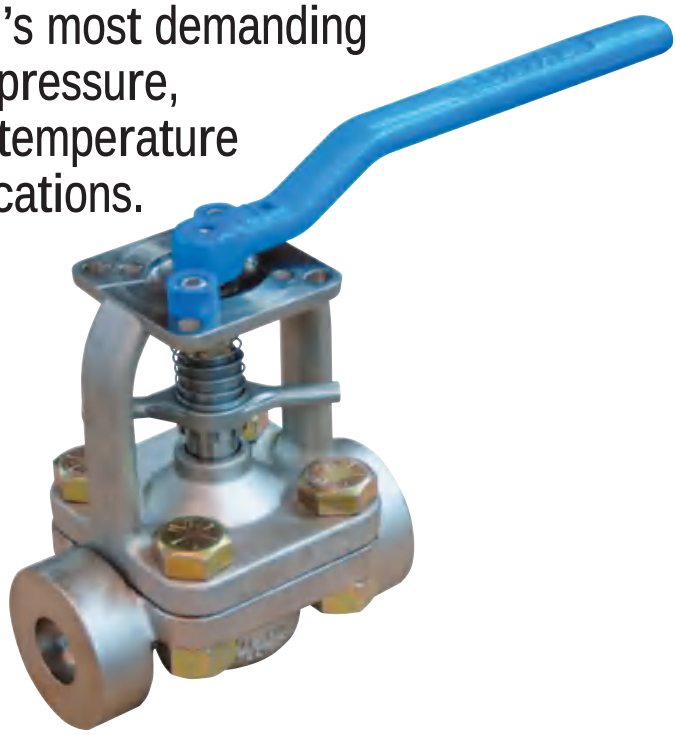

STANDARD SIZES
1/2" through 4" Top Entry
SW, BW and FNPT Ends

PRESSURE RATING
ASME Class 900 through 4500

STANDARD MATERIALS
Carbon Steel WCB, WC9, and C12A
Stainless Steel Cast 316/316L
Other materials available upon request

STANDARD ACCESSORIES
ISO-5211 Integral Mounting Pad
Actuators - Electric, Pneumatic or Hydraulic

DESIGN FEATURES

Conval Camseal Ball Valve Provides Zero Leakage

Zero Body Leakage: The body/bonnet joint is not subject to pipeline stresses. There is no in-line body bolting to loosen and fatigue, so the body remains leak-free.

Zero Seat Leakage: All valves are capable of meeting zero bubbles for 4 minutes @ 50 psi and 1,000 psi Nitrogen at final factory hydrotest, after field in-line welding, following post-weld heat treat, during and after process thermal excursions including thermal shocks. Modular internals isolate critical seal surfaces from thermal effects..

Zero Stem Seal Leakage: Conval's exclusive Integral Gland Wrench concentrically loads the stem packing without tools, eliminating stem leaks and extending packing life. Live loading is available as an option.

Robust Stem-Ball Engagement

Reliable, accurate ball alignment is achieved due to the robust engagement between the one-piece stem and the ball.

Superior Bearing Support

Superior bearing support of the blowout-proof stem ensures proper axial alignment and Zero Seat Leakage even on actuated valves.

Chrome Carbide Coating System

Conval's highly-engineered flame spray Chrome Carbide coating system has superior bond strength and coating density to provide long-life, leak-free performance even in high temperature drop applications.

In-line Servicing

In-line renewability can be accomplished in 30 minutes and restores Zero Leakage performance in the event of process application abuse.

Integral Mounting Pad

An ISO-5211 integral mounting pad facilitates error-free, air, motor and gear operator actuation due to superior rigidity, precise alignment and a fully-guided stem bearing system. Lockout capability is standard.

Two-Year Warranty

Conval is committed to unsurpassed quality. We are so confident of the quality of our product, that we offer a two-year warranty.

United States Patent No. 7,267,323

常州原见能源科技有限公司
oriseen.cn

CAMSEAL® BALL VALVE LIST OF MATERIALS

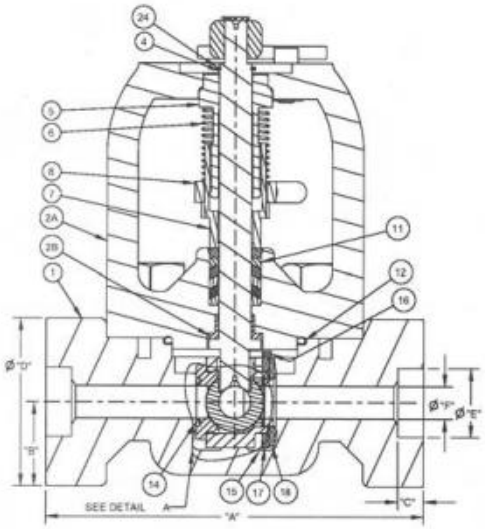

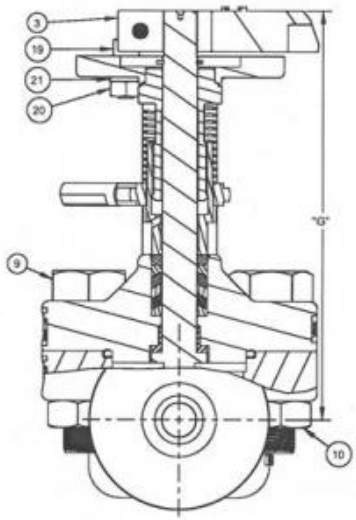

SECTION C-C

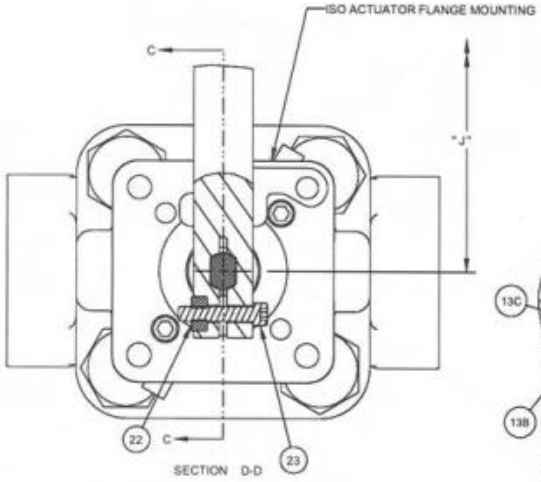

NO.	NAME	QTY	MATERIAL	MATERIAL	MATERIAL	MATERIAL
1	BODY	1	ASME-SA-216 Gr. WCB	ASME-SA-217 Gr. WC9	ASME-SA-217 Gr. C12A	ASME-SA-351-CF3M
2	BONNET ASSEMBLY	1				
2A	BONNET	1	ASME-SA-216 Gr. WCB	ASME-SA-217 Gr. WC9	ASME-SA-217 Gr. C12A	ASME-SA-351-CF3M
2B	BONNET STEM BEARING	1	ASME-SA479 TYPE 410	ASME SA479 TYPE 410	ASME SA479 TYPE 410	ASME SA479 TYPE 316
3	HANDLE	1	ASME-SA-216 Gr. WCB	ASME-SA-216 Gr. WCB	ASME-SA-216 Gr. WCB	ASME-SA-216 Gr. WCB
4	STEM	1	ASTM A582 TYPE 416	ASTM A582 TYPE 416	ASTM A582 TYPE 416	ASME SA479 TYPE XM-19H
5	BUSHING GLAND	1	ASME SB150	ASME SB150	ASME SB150	ASME SB150
6	IGW SPRING	1	MFR STD STAINLESS	MFR STD STAINLESS	MFR STD STAINLESS	MFR STD STAINLESS
7	GLAND	1	ASTM A582 TYPE 416	ASTM A582 TYPE 416	ASTM A582 TYPE 416	ASME SA479 TYPE 316
8	IGW	1	AMS 5360, AMS 5370	AMS 5360, AMS 5370	AMS 5360, AMS 5370	AMS 5360, AMS 5370
9	BODY BOLT	SD	ASME SA193 B16	ASME SA193 B16	ASME SA193 B16	ASME SA193 B8M
10	BODY FLANGE NUT	SD	ASME SA194 GR 4	ASME SA194 GR 4	ASME SA194 GR 4	ASME SA194 GR 8M
11	PACKING SET	2	GARLOCK QUICK SET 9001 PACKING			
12	C-RING BONNET/BODY	1	ASTM B670	ASTM B670	ASTM B670	ASTM B670
13	CARTRIDGE ASSY	1				
13A	CARTRIDGE	1	ASME SA479 TYPE 410	ASME SA479 TYPE 410	ASME SA479 TYPE 410	ASME SA479 TYPE 316
13B	COATED SEAT	1	ASME SA479 TYPE 410	ASME SA479 TYPE 410	ASME SA479 TYPE 410	ASME SFA5.14
13C	COATED BALL	1	ASME SA479 TYPE 410	ASME SA479 TYPE 410	ASME SA479 TYPE 410	ASME SFA5.14
13D	UPSTREAM SEAT	1	ASME SA479 TYPE 410	ASME SA479 TYPE 410	ASME SA479 TYPE 410	ASME SA479 TYPE 316
13E	UPSTREAM SEAT BELLEVILLE		ASTM B670, AMS 5596	ASTM B670, AMS 5596	ASTM B670, AMS 5596	ASTM B670, AMS 5596
14	C-RING SEAT TO BODY	1	ASTM B670	ASTM B670	ASTM B670	ASTM B670
15	CAM	2	ASME SA479 TYPE 410	ASME SA479 TYPE 410	ASME SA479 TYPE 410	ASME SA479 TYPE XM-19H
16	CAM LOCK	1	ASME SA240 TYPE 316	ASME SA240 TYPE 316	ASME SA240 TYPE 316	ASME SA240 TYPE 316
17	SPACER	1	ASME SFA5.14	ASME SFA5.14	ASME SFA5.14	ASME SFA5.14
18	CAM BELLEVILLE	1	ASTM B670, AMS 5596	ASTM B670, AMS 5596	ASTM B670, AMS 5596	ASTM B670, AMS 5596
19	STOP BOLT	2	MFR STD STAINLESS	MFR STD STAINLESS	MFR STD STAINLESS	MFR STD STAINLESS
20	STOP NUT	2	MFR STD STAINLESS	MFR STD STAINLESS	MFR STD STAINLESS	MFR STD STAINLESS
21	STOP LOCK WASHER	2	MFR STD STAINLESS	MFR STD STAINLESS	MFR STD STAINLESS	MFR STD STAINLESS
22	HANDLE NUT	1	MFR STD STAINLESS	MFR STD STAINLESS	MFR STD STAINLESS	MFR STD STAINLESS
23	HANDLE BOLT	1	MFR STD STAINLESS	MFR STD STAINLESS	MFR STD STAINLESS	MFR STD STAINLESS
24	SNAP RING STEM RETAINER	1	MFR STD	MFR STD	MFR STD	MFR STD

Note: Stainless Steel Item 23 – key material shown (Nitronic 50) supplied for Inconel 718 stems. Key material not shown (Nitronic 60) supplied for Nitronic 50 stems.

SIZE		ASME	INCHES								LBS.	CV
SIZE	CODE	CLASS	A	B	C	D	E	F	G	J	WEIGHT	
1/2 THRU 1 1/2	5E	1700# 3100#	7 1/4	1 5/8		3 1/4	-	5/8	7 3/8	15 3/16	30 1/4	14-42*
1/2 THRU 1 1/4	7E	4500#	9 1/4	2		4	-	5/8	10 5/32	24 3/16	60	
2 THRU 2 1/2	7H	1700# 3100#	9 1/4	2		4	-	1 1/16	10 5/32	24 3/16	62	37-71*
1 1/2 THRU 4	9H	4500#	11	2 11/32	-	4 11/16	-	1 1/16	11 1/2	32	100	
3 THRU 4 (BW ONLY)	9J	1700# 3100#	11	2 11/32		4 11/16		1 1/2	11 1/2	32	112	69-107*

SIZE		ASME	MILLIMETERS								KG	CV
SIZE	CODE	CLASS	A	B	C	D	E	F	G	J	WEIGHT	
1/2 THRU 1 1/2	5E	1700# 3100#	184	41	- -	83	-	16	187	386	13.7	14-42*
1/2 THRU 1 1/4	7E	4500#	235	51	-	102	-	16	258	614	27.2	
2 THRU 2 1/2	7H	1700# 3100#	235	51	-	102	-	27	258	614	28.1	37-71*
1 1/2 THRU 4	9H	4500#	279	60	-	119	-	27	292	813	45.4	
3 THRU 4 (BW ONLY)	9J	1700# 3100#	279	60	-	119	-	38	292	813	50.8	69-107*

*The first number represents the Practical Cv based on pipe ID, the second number represents the Max Cv of the valve.

常州原见能源科技有限公司
oriseen.cn

CLAMPSEAL SWIVLDISC GATE VALVE

Swivldisc Gate Valve with bypass

- Integral Gland Wrench
- In Line Repairable
- Adaptable for Air or Motor Actuators

The Conval CLAMPSEAL® Swivldisc Gate Valve delivers performance at the standard set by the legendary CLAMPSEAL® Globe Valve.

The Swivldisc wedge gate design employs a floating disc face which permits the seating surfaces to achieve perfect alignment, establishing a leak tight seal not possible with standard wedge gates.

The simple and effective CLAMPSEAL® pressure seal bonnet provides ready access for servicing with no welds to cut or seal rings or gaskets to replace. The body-to-bonnet joint integrity is maintained through countless thermal cycles.

The Conval packing system delivers the best performance available. The one-piece gland with integral gland wrench is readily adjustable at anytime. Repacking can be accomplished by swapping the bonnet-chamber with the fresh pre-packed unit. The fine finish of the stem and chamber combines with high performance graphite packing to ensure long packing service life.

Selection of the CLAMPSEAL® Swivldisc is a commitment to quality at best value.

Conval's Swivldisc is the gate valve of choice when performance must be assured in the most demanding services.

- *Swivldisc gate*
- *Pressure Seal Bonnet*
- *High Performance Graphite Packing*
- *One Piece Gland*
- *Unobstructed, Full Port Flow*

常州原见能源科技有限公司
oriseen.cn

Materials List & Dimensions

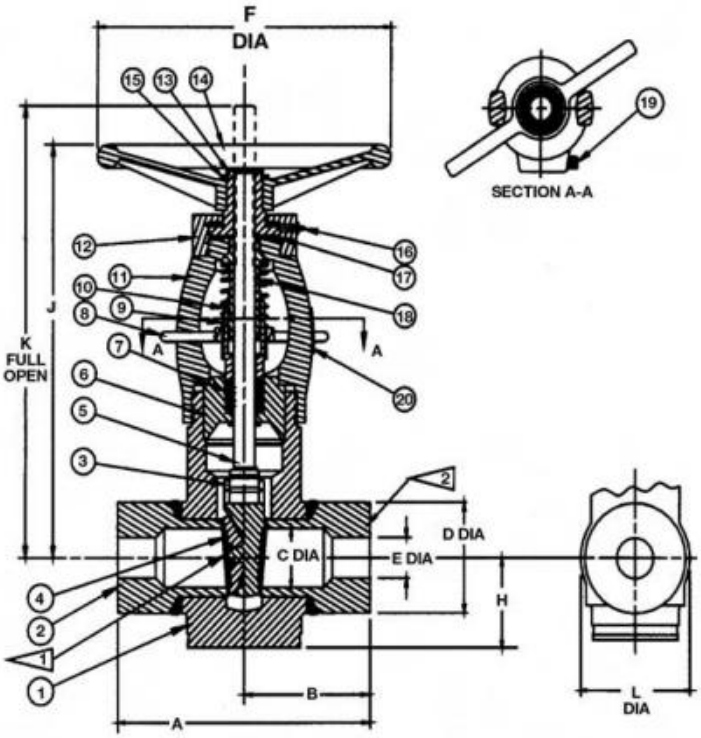

MATERIALS

No.	Name	Qty.	Material	Specification
1	Body	1	Carbon Steel	ASME SA-216 GR WCB
2	Hub	2	Carbon Steel	ASME SA-696 GR. C
3	Gate	1	Stainless Steel Cobalt Alloy	ASME SA-479 TYPE 410
4	Disc	1	Cobalt Alloy	
5	Stem	1	Stainless Steel	ASTM A582-TYPE 416
6	Bonnet	1	Stainless Steel	ASME SA-479 TYPE 410
7	Packing	SET	Graphite Rings	HIGH DENSITY GRAPHITE
8	IGW	1	Cast Stainless	Stainless Steel
9	Spring	1	Stainless Steel	Mfg. Std.
10	Gland	1	Stainless Steel	ASTM A582-TYPE416
11	Yoke	1	Carbon Steel	ASME SA-216 GR WCB/SA-105
12	Bearing Cap	1	Carbon Steel	Mfg. Std.
13	Stem Nut	1	Aluminum Bronze	ASME SB-150 UNS C64200
14	Handwheel	1	Iron/Steel	Mfg. Std.
15	Retaining Ring	1	Stainless Steel	Mfg. Std.
16	Grease Fitting	1	Stainless Steel	Mfg. Std.
17	Bearing Set	2	Commercial	Mfg. Std.
18	Yoke Bushing	1	Aluminum Bronze	ASME SB-150 UNS C64200
19	Clampbolt	1	Stainless Steel	Mfg. Std.
20	ID Plate	1	Stainless Steel	Mfg. Std.

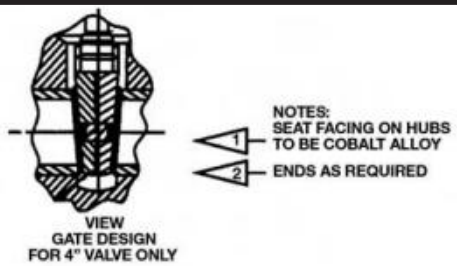

OTHER MATERIALS AVAILABLE UPON REQUEST

Pressure Class	Size Code	Pipe Size	Valve Outline Dimensions A	B	C	D	E	F	H	J	K	L	Flow Cv
1500	2E	1/2 15	5 1/2 140	2 3/4 70	0.815 21	2 1/16 52	0.466 12	6 152	1 3/4 45	9 229	9 1/4 235	2 7/8 73	15
	2E	3/4 20	5 1/2 140	2 3/4 70	0.815 21	2 1/16 52	0.612 16	6 152	1 3/4 45	9 229	9 1/4 235	2 7/8 73	25
	2E	1 25	5 1/2 140	2 3/4 70	0.815 21	2 1/16 52	0.815 21	6 152	1 3/4 45	9 229	9 1/4 235	2 7/8 73	45
	3G	1 1/2 40	7 178	3 1/2 95	1.338 34	3 80	1.338 34	8 203	2 1/8 54	12 7/8 327	13 5/8 346	3 1/2 95	131
	4J	2 50	8 1/2 215	4 1/4 108	1.689 43	3 3/4 95	1.689 43	10 254	2 7/8 73	15 3/4 400	16 5/8 422	4 3/4 120	225
	5L	2 1/2 65	10 250	5 125	2.300 58	5 1/8 130	2.125 54	14 356	4 100	19 5/8 498	20 1/2 515	7 178	348
	6N	3 80	12 300	6 150	2.624 67	5 1/4 133	2.624 67	14 356	4 100	19 5/8 498	20 5/8 524	7 178	535
	8R	4 100	16 400	8 200	3.438 87	6 3/4 170	3.438 87	14 356	4 3/4 120	22 1/2 565	25 1/2 648	7 1/2 191	958
2500	2D	1/2 15	7 5/16 186	3 21/32 93	0.599 15	2 5/32 55	0.252 6	6 152	1 3/4 45	9 229	9 1/4 235	2 7/8 73	4
	2D	3/4 20	7 5/16 186	3 21/32 93	0.599 15	2 5/32 55	0.434 11	6 152	1 3/4 45	9 229	9 1/4 235	2 7/8 73	12
	2D	1 25	7 5/16 186	3 21/32 93	0.599 15	2 5/32 55	0.599 15	6 152	1 3/4 45	9 229	9 1/4 235	2 7/8 73	23
	3F	1 1/2 40	9 1/8 232	4 9/16 116	1.100 28	3 80	1.100 28	8 203	2 1/8 54	12 7/8 327	13 5/8 346	3 1/2 95	81
	4H	2 50	11 279	5 1/2 140	1.503 38	3 3/4 95	1.503 38	10 254	2 7/8 73	15 3/4 400	16 3/8 416	4 3/4 120	157
	5K	2 1/2 65	13 330	6 1/2 165	2.300 58	5 1/8 130	1.771 45	14 356	4 100	19 5/8 498	20 1/2 521	7 178	240
	6M	3 80	14 1/2 365	7 1/4 184	2.300 58	5 1/8 130	2.300 58	14 356	4 100	19 5/8 498	20 1/2 521	7 178	405
	8P	4 100	18 450	9 229	3.152 80	6 1/4 158	3.152 80	14 356	4 3/4 120	22 1/2 565	24 1/2 622	7 1/2 191	806

Numbers shown in Black indicate dimensions in inches, weightin pounds. Numbers shown in blue indicate dimensions in mm.

常州原见能源科技有限公司
oriseen.cn

CLAMPSEAL® Valve

CARTRIDGE REPLACEABLE PACKING CHAMBER

Fastest repacking of any valve by swapping bonnet assembly. Minimum packing volume reduces shrinkage and repacking costs. Graphite packing standard on all valves. Other options are available.

ACME BODY - YOKE CONNECTION

Strong and reliable for repeated valve maintenance.

PRESSURE ACTUATED BACKSEAT

Backseat requires very low torque for total isolation of packing. Provides guide journal for stem, avoiding side load of packing.

ELECTROLESS - NICKEL PLATING

or stainless steel for wetted parts

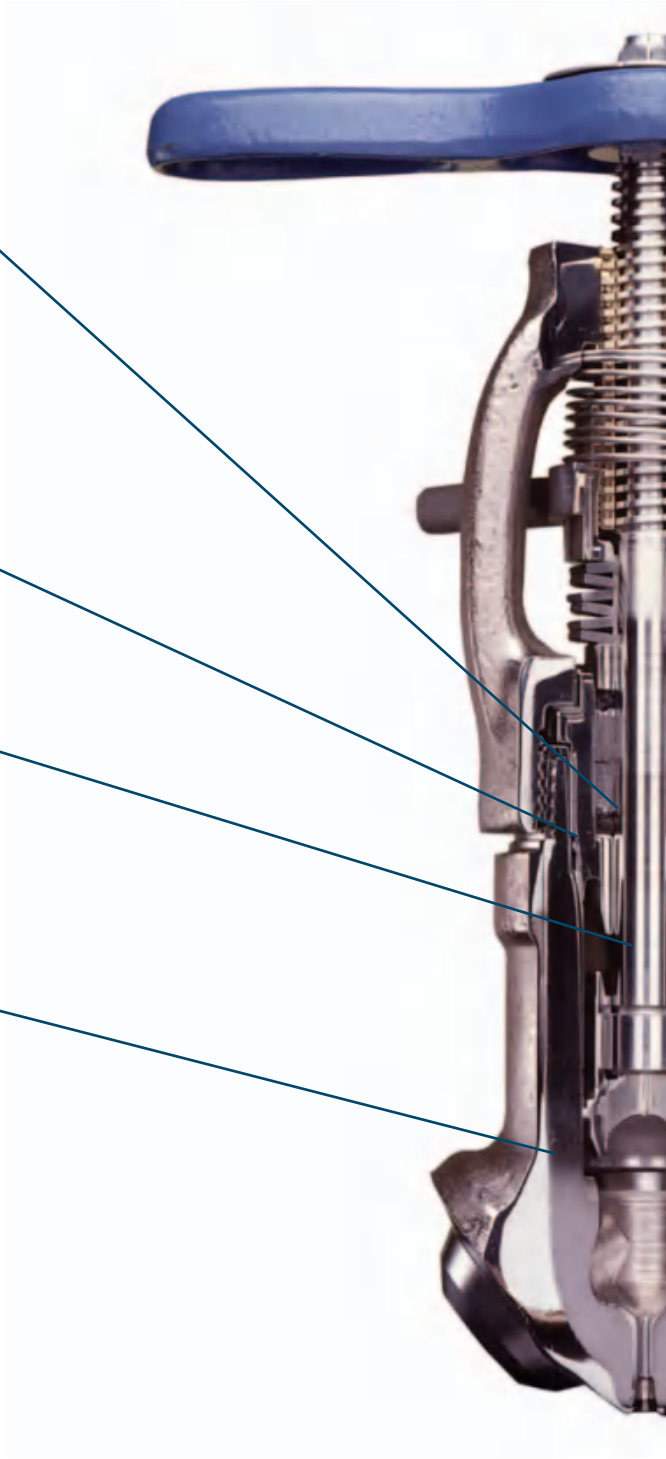

常州原见能源科技有限公司
oriseen.cn

The Most Advanced Forged Valve Available

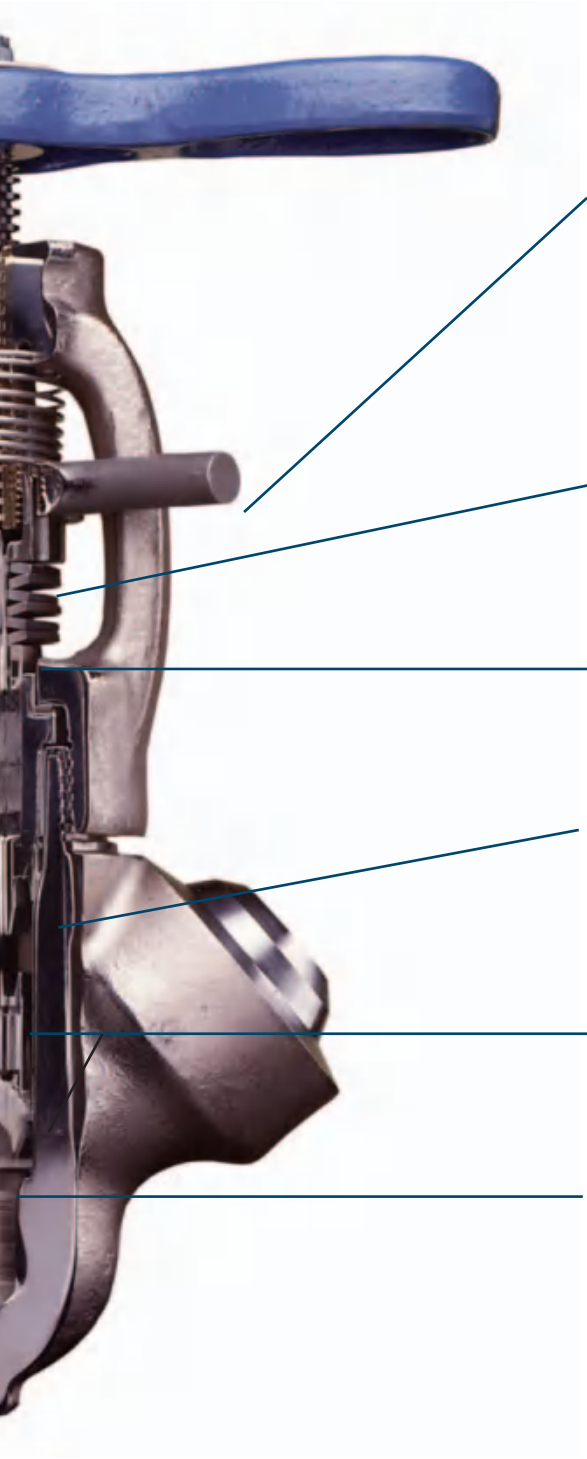

INTEGRAL GLAND WRENCH

Makes packing adjustment simple. Provides lock on packing gland. Available on all size valves.

SINGLE PIECE PACKING GLAND

One step packing adjustment ensures concentric loading.

OPTIONAL LIVE LOADED GLAND

UNIQUE PRESSURE SEAL BONNET

Effective sealing accomplished without welds or gaskets.

SELF ALIGNING SEATING

Disc-Retainer firmly engaged to stem yet free to align perfectly to seat. Made possible by advanced electron beam welding.

SOLID STELLITE™ SEAT AND DISC

Line contact seating for positive tight shutoff. Two stage pressure drop for reduced wear of seating surfaces. Abundant material for repeated refacing of seat surfaces.

常州原见能源科技有限公司
oriseen.cn

Strainers

The CLAMPSEAL® design is available in a variety of in-line Y-strainer configurations. Supplied as either a simple strainer with blowoff socket connection or strainer with integral blowoff valve, the CLAMPSEAL® is easily disassembled for element cleaning or changeout. The CLAMPSEAL® offers a versatile economical alternative for strainer requirements.

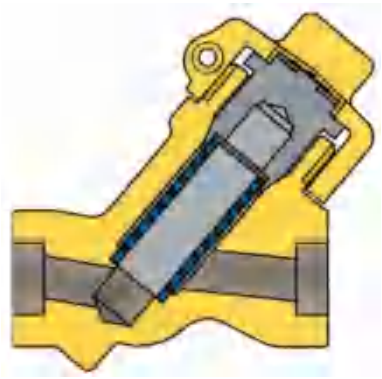

CLAMPSEAL® Strainer

Specifications:

Size:	1/2" - 4"	
Class:	600 - 3500	
Material:	SA	105
	SA	182-F22
	SA	182-F91
	SA	182-F316

Standard Strainer

Element Hole Sizes: 1/32, 3/64, 1/16, 3/32, 1/8

Options: Mesh Lined Strainer Elements

Example: 0.75-11Y4-F22

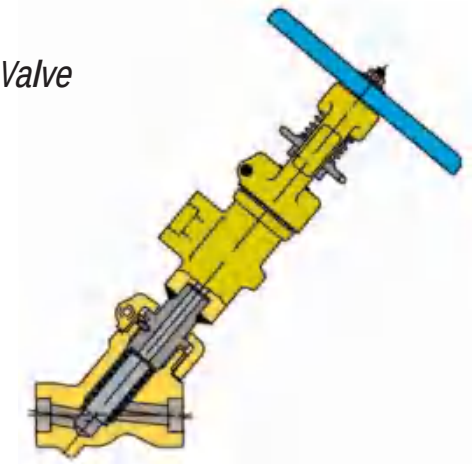

CLAMPSEAL® Strainer W/Blowoff Valve

Specifications:

Size:	1/2" - 4"	
Class:	600 - 3500	
Material:	SA	105
	SA	182-F22
	SA	182-F91
	SA	182-F316

Standard Strainer

Element Hole Sizes: 1/32, 3/64, 1/16, 3/32, 1/8

Options: Mesh Lined Strainer Elements

Example: 0.50-13W2J-316

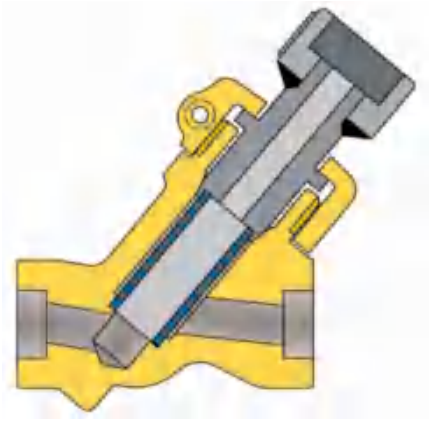

CLAMPSEAL® Strainer w/Blowoff Fitting

Specifications:

Size:	1/2" - 4"	
Class:	600 - 3500	
Material:	SA	105
	SA	182-F22
	SA	182-F91
	SA	182-F316

Standard Strainer

Element Hole Sizes: 1/32, 3/64, 1/16, 3/32, 1/8

Options: Mesh Lined Strainer Elements

Example: 0.50-13X2-316

Blowoff bonnet enables use of any CLAMPSEAL® Valve as a flush point.

常州原见能源科技有限公司
oriseen.cn

Whisperjets

High pressure drops introduce severe erosion and wear in normal service valves. The Conval globe valve receives the high pressure inlet stream. Discharge is through a series of multi pressure reduction stages called Whisperjets. Each Whisperjet section has four or six orifices around its perimeter. The orifices discharge inwardly, allowing the flow streams to impinge on each other rather than on the valve or sections themselves. These Whisperjets are designed to prevent sonic flow and critical pressure drops from occurring. By reducing the pressure in stages, cavitation, erosion, fluid velocity and sound level are minimized.

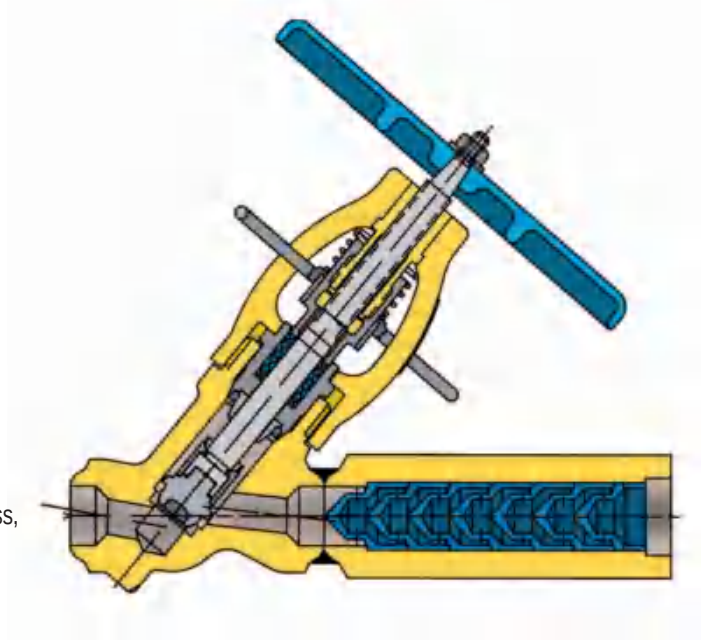

Water

Specifications:

Type:	Angle, Y or T-pattern
Size:	1/2" - 4"
Class:	ASME 600 - 4500
End:	Socket Weld, Butt Weld
Material:	SA 182-F22, SA 182-F91, SA 105
Actuation:	Air, Motor, Manual
Applications:	Feedwater Pump Recirculation Bypass, Steel Mill Descaling Processes
Example:	1.00-22G2J-105

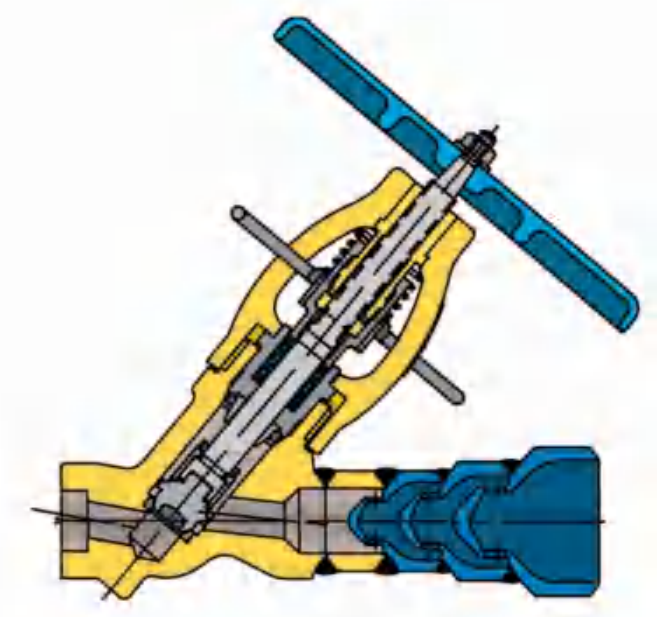

Steam

Specifications:

Type:	Angle, Y or T-pattern
Size:	1/2" - 4"
Class:	ASME 600 - 4500
End:	Socket Weld, Butt Weld
Material:	SA 182-F22, SA 182-F91, SA 105
Actuation:	Air, Motor, Manual
Applications:	Blowdown, Flash Tank Protection,Vents
Example:	1.50-23G2J-F22

Whisperjets provide for the progressive increase in specific volume as pressure drops.

常州原见能源科技有限公司
oriseen.cn

Bonnetless, B16.34 Process Valve

Outstanding Operating Features with Cost Effective Performance Benefits

- OS&Y Design– The outside screw and yoke design allows for trouble free operation because all operational threaded parts are outside of the system fluid.
- Superior Axial Design– provides tight concentricity to eliminate side loading and minimize wear forces on valve trim components.
- Durable Materials of Construction– available carbon steel (A105), low alloy (F22), and stainless steel (F316) materials offer excellent corrosion resistance. Special materials are available (consult factory).
- Forged One Piece Body/Yoke– has no welds or seams and provides excellent structural integrity over the life of the valve.
- High Performance Packing System– corrosion inhibited graphitic packing maintains packing loads at high temperatures for long periods. Uniform loading of the axial one-piece gland and a precisely machined stainless steel stem and stuffing box ensure a tight seal between packing material and sealing surfaces.
- Easily Adjustable Integral Gland Wrench (IGW)– one piece gland with integral wrench allows simple field adjustment of packing without special tools.
- Stainless Steel Disc (plug) and Chrome Cobalt Seat– provide excellent seating and ensure tight shut-off in the most demanding service.
- Numerous End Configurations– a choice of pipe or tube socket weld, butt weld, and female pipe threaded ends is available to suit any application.
- Meets all requirements of ASME B16.34 pressure classes through 2500 lbs.

Versatility for a Wide Range of Process Applications

Conval Bonnetless Shut-Off Valves are suitable for use with high temperature, high pressure steam, chemicals, solvents, acids, gases and corrosive fluids. They can also be used in high purity systems, chemical processing, gauge, drain valve or vent shut-off, instrument isolation, hydraulics, pneumatics, sampling, test bench and feed line applications.

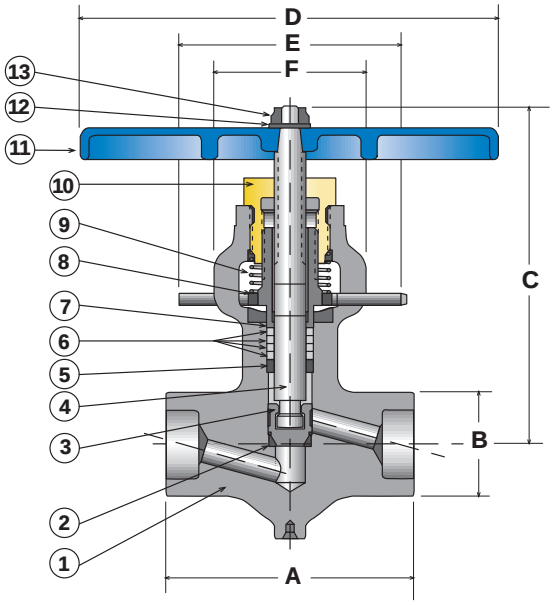

No.	Name	Quantity	Material	Specification
1	Body	1	A105 F22 F316	SA105 SA 182-F22 SA 182-F316
2	Seat Ring	1	CoCr	
3	Disc	1	410/N60	SS
4	Stem	1	17-4PH/N50	
5	Packing Retainer	1	SS	Mfg. Std.
6	Packing	3	Graphitic or Fluoroelastomer (Teflon®)	
7	Gland Bushing	1	SS	SA 479 T316
8	Integral Gland Wrench	1	SS	Mfg. Std.
9	Spring	1	SS	Mfg. Std.
10	Yoke Nut	1	Aluminum Bronze	SB150
11	Handle	1	Ductile Iron	Mfg. Std.
12	Washer	1	SS	Mfg. Std.
13	Locknut	1	SS	Mfg. Std.

A Choice of Standard Sizes

Pressure Rating: Full ASME B16.34 rated through 2500. Limited class ratings are available (consult factory).

Temperature Range: -280 to 1,100 F, depending on material selection.

To Specify:

1. Use "1" in the product type modifier indicating it is a bonnetless valve (e.g.: .50-12103-105).

Size Code	Pipe Size	Dimensions A	B	C (open)	D	E	F	Pressure Class	Cv (Approx.)	Wt
1A	1/4-3/8	2.75	1.25	4.62	5.00	2.50	1.25	2500	1	1.5
1A	6-10	70	32	117	125	64	32	2500		0.7
2C	1/2-3/4	3.75	1.63	5.75	6.50	4.00	1.75	2500	2	3.5
2C	13-19	95	41	145	165	102	45	2500		1.6

Numbers shown in Black indicate dimensions in inches, weightin pounds. Numbers shown in blue indicate dimensions in mm, weights in kilograms.

常州原见能源科技有限公司
oriseen.cn

Bellows Seal Valve

Packed valves require two different seals: a 360° seal on the stem and a 360° seal on the stuffing box. The Conval Bellows Seal Valve removes these two leak paths.

Conval Bellows Seal Valves are used when packed valves may not reliably contain light gases or hazardous system fluids. The multi-ply Inconel™ static bellows stem seal is more reliable in most applications than sliding stem seals.

Conval Bellows Seal Valves have a secondary graphite packing and a pressure actuated backseat to contain system fluids in the unlikely event of a Bellows rupture.

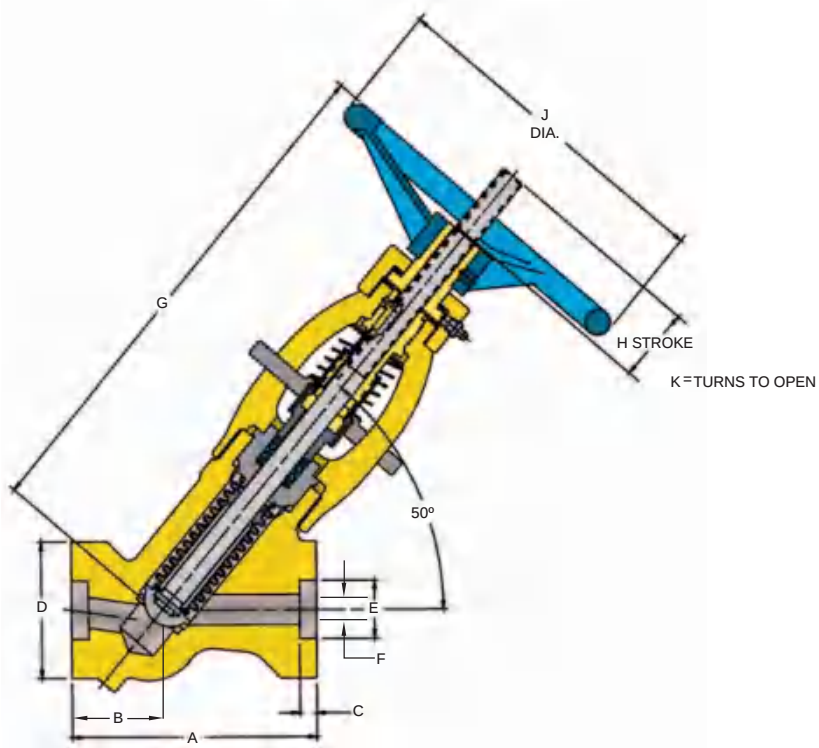

PRESSURE CLASS	Pipe Size	A	B	C	D	E	F	G	H	J	Flow CV	Wt. (LBs.)/(kgs)	Size CODE
	1/2	6 1/8	2 7/16	1/2	2 11/16	0.860	5/8	11 7/8	0.563	8	6.7	22.5	6E
	15	156	62	15	68	22	16	302	14	200		10.2	
	3/4	6 1/8	2 7/16	1/2	2 11/16	0.860	5/8	11 7/8	0.563	8	6.7	22.5	6E
	20	156	62	15	68	22	16	302	14	200		10.2	
	1	6 1/8	2 7/16	1/2	2 11/16	1.335	1	11 7/8	0.563	8	13.8	21	6G
	25	156	62	15	68	22	25	302	14	200		9.5	
	1 1/4	6 1/8	2 7/16	1/2	2 11/16	1.680	1	11 7/8	0.563	8	13.8	21	6G
	32	156	62	15	68	43	25	302	14	200		9.5	
1500	1 1/2	7 1/4	2 11/16	5/8	3 15/16	1.920	1 1/2	16 5/16	0.774	10	31.0	40	8J
	40	184	68	16	100	49	40	414	20	250		18.1	
	2	7 1/4	2 11/16	5/8	3 15/16	2.411	1 1/2	16 5/16	0.774	10	31.0	40	8J
	50	184	68	16	100	61	40	414	20	250		18.1	
	2 1/2	12	5-9/32	5/8	4 7/8	2.913	2 1/4	20 3/16	0.911	14	55.0	96	10L
	65	300	134	16	124	74	58	512	23	350		43.5	
	3	12	5 9/32	*	4 7/8	*	2 1/4	20 3/16	0.911	14	55.0	96	10L
	80	300	134		124		58	512	23	350		43.5	
	4	12	5 9/32	*	4 7/8	*	2 1/4	20 3/16	0.911	14	55.0	96	10L
	100	300	134		124		58	512	23	350		43.5	
	1/2	6 1/8	2-7/16	1/2	2 11/16	0.860	5/8	11 5/8	0.350	8	4.8	22.5	6E
	15	156	62	15	68	22	16	295	9	200		10.2	
	3/4	6 1/8	2 7/16	1/2	2 11/16	0.860	5/8	11 5/8	0.350	8	4.8	22.5	6E
	20	156	62	15	68	22	16	295	9	200		10.2	
	1	6 1/8	2 7/16	1/2	2 11/16	1.335	13/16	11 5/8	0.350	8	6.8	22	6F
2500	1 1/4	6 1/8	2 7/16	1/2	2 11/16	1.680	13/16	11 5/8	0.350	8	6.8	22	6F
	32	156	62	15	68	43	21	295	9	200		10	
	1 1/2	7 1/4	2 11/16	5/8	15/16	1.920	1 1/4	16	0.481	10	19.0	42 19	8H
	40	184	68	16	100	49	33	400	12	250			
	2	7 1/4	2 11/16	5/8	3 15/16	2.411	1 1/4	16	0.481	10	19.0	42 19	8H
	50	184	68	16	100	61	33	400	12	250			
	2 1/2	12	5 9/32	5/8	4 7/8	2.913	1 7/8	19 13/16	0.583	14	30.0	105	10K
	65	300	134	16	124	74	48	504	15	350		47.6	
	3	12	5 9/32	*	4 7/8	*	1 7/8	19 13/16	0.583	14	30.0	105	10K
	80	300	134		124		48	504	15	350		47.6	
	4	12	5 9/32	*	4 7/8	*	1 7/8	19 13/16	0.583	14	30.0	105	10K
	100	300	134		124		48	504	15	350		47.6	

BW dimensions supplied per customer requests. * All weights are approximate for shipping purposes only.
Numbers shown in Black indicate dimensions in inches, weight in pounds. Numbers shown in blue indicate dimensions in mm, weights in kilograms.

常州原见能源科技有限公司
oriseen.cn

Special Application Valves

The CLAMPSEAL® design is uniquely suited to a number of special applications where service demands require rugged construction while retaining easy in-line serviceability. No other forged valve offers this variety of applications.

Tandem Blowdown

Traditional bottom blowdown service requires a tandem valve. Unlike older massive designs with limited serviceability, the CLAMPSEAL® unit tandem valve offers compactness, lighter weight and easy maintainability as well as longevity of service.

Specifications:

Size/Style:	1" - 2 1/2"	Material:	SA 105
Class:	1195, 2155, 3045		SA 182-F22
End:	Socket Weld, Butt Weld, Clamp Connector	Example:	1.00-12B8HJ-105

Cryogenic Service

High pressure cryogenic service demands special attention to design and quality of material and fabrication. The CLAMPSEAL® delivers tight shutoff and operability through a wide temperature range and meets ANSI B 31.3 requirements.

Specifications:

Size:	1/2" - 4"	Temperature:	To -320ºF
Class:	ASME 1500 and 2500	Material:	SA 182-316
		Example:	1.00-12J2J-316

Three-Way Service

Conval has responded to the need for a high pressure, high temperature 3-way valve with easy serviceability for both seats. Excellent service history and versatility make the CLAMPSEAL® valve the choice for 3-way service.

Specifications:

Size:	1 1/2" - 3"	Material:	Carbon Steel: (WCB)
Class:	ASME 900 - 2500		Low Alloy: (WC9)
End:	Socket Weld, Butt Weld,Flanged, Clamp Connector		Stainless: (CF8M)
		Example:	1.50-13Z4J-316

Naval Boiler Blowdown

The CLAMPSEAL® Naval Boiler Blowdown valve meets the requirements of MIL-V-17737 and other applicable specifications.

Specifications:

Size:	1 1/2"	Material:	Carbon Steel or Alloy Steel
Type:	I (Handwheel) or II (T-handle)	Example:	1.50-12G8CJ-N05
Class:	1 (600 lb) or 2 (1500 lb)	NSN:	4820-01-124-3694,
Style:	Straightaway (Y) or Angle		4820-01-140-4834
			4820-01-018-3780,
			4820-01-018-3781

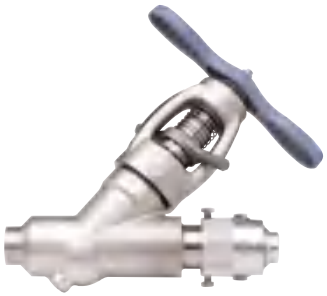

SaVD Series Safe Vent Drain

Now you can add a simple, single-weld, dual sealing system to Clampseal Y-pattern valves to enhance leak-free performance and allow for fast, safe, environmentally-friendly venting and draining of piping systems.

Specifications:

Size:	1/2" - 2"	Material:	Stainless Steel A479-F316, , A105,
Type:	Y-Pattern; NPT, BW, SW Ends		F22 and other materials upon request.
Class:	Thru ASME 2500#	Options:	Securing Chain, Rodable Cap

常州原见能源科技有限公司
oriseen.cn

CLAMPSEAL® Extended End Valve & Clamp Connector Ends

Whenever replacements of any manufacturer's Y-Pattern valve are made, Conval now provides a couple of options to simplify the replacement. Depending upon the particular replacement needs, Conval can supply an *Extended Body Valve* or a *Valve with Extensions*. Under normal circumstances, the *Extended Body Valve* will have sufficient end-to-end length to allow replacement of an existing valve without adding material. If further end-to-end length is required, the *Valve with Extensions* would be recommended.

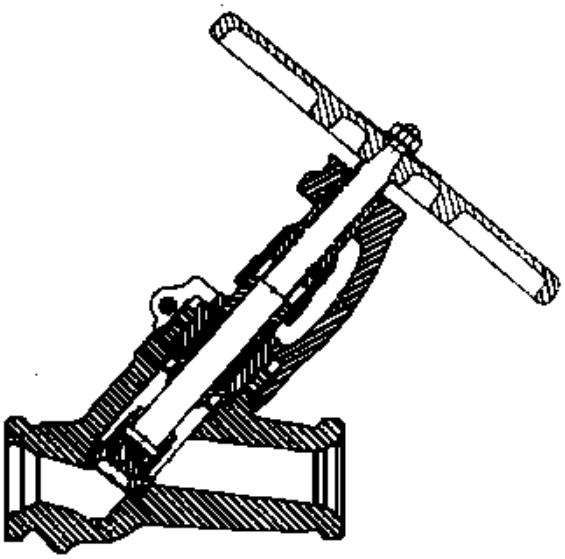

Clamp Connector End

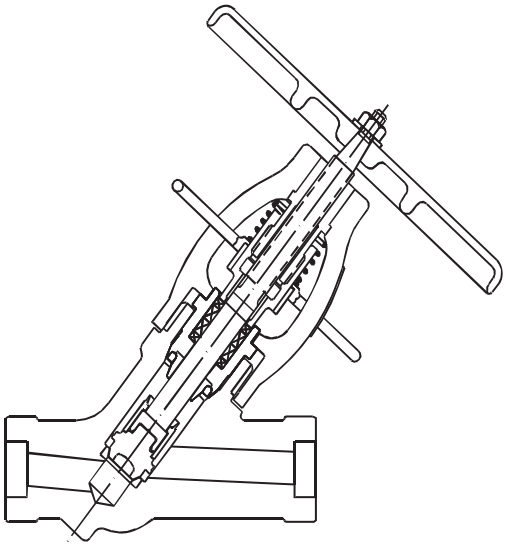

Extended Y-Pattern Body Valve

Socket Weld shown, Butt Weld also available

Pressure Class K	Size Code	Pipe Size	Conval Extended Y-Pattern Body Valve	Conval Extended Y Pattern Body Valve with Pipe Extensions	Competitor A	Competitro B	Conmpetitor C
1500#		3/4 - 1 20 - 25	7.50 191	10.50 265	6.00 150	4.375 - 5.00 111 - 125	4.375 - 5.00 111 - 125
2500#	5	3/4 - 1 20 - 25	7.50 191	10.50 265	6.00 150	5.00 125	4.375 - 5.00 111 - 125
4500#		1/2 15	7.50 191	10.50 265	8.20 208	7.25 184	5.75 146
1500#		1 1/2 40	9.50 241	12.00 300	6.70 170	6.25 158	7.25 184
2500#	7	1 1/4 - 1 1/2 32 - 40	9.50 241	12.00 300	6.70 170	7.25 184	7.25 184
4500#		1 - 1 1/2 32 - 40	9.50 241	12.00 300	8.20 208	7.25 - 9.625 184 - 245	12.00 300
1500#		2 50	11.00 279	13.50 343	8.20 208	7.25 184	10.13 257
2500#	8	2 50	11.00 279	13.50 343	10.70 272	9.63 244	10.13 257
4500#		2 50	11.00 279	13.50 343	12.80 325	9.63 244	12.00 300

Numbers shown in Black indicate dimensions in inches, weightin pounds. Numbers shown in blue indicate dimensions in mm.

常州原见能源科技有限公司
oriseen.cn

Actuators

Conval CLAMPSEAL® valves are easily adapted to electric motor or pneumatic actuation. Valves ordered with actuators are assembled, functionally tested at Conval and shipped ready for installation. Where customers have existing actuators, the CLAMPSEAL® valve is provided with appropriate yoke flange and stem adaptor. All actuated valves are furnished with an integral gland wrench.

Electric Motor Actuated

Specifications:

Size:	1/2" - 4"
Class:	thru 4500
Material:	SA 105
	SA 182-F22
	SA 182-F91
	SA 182-F316
Actuator:	Limitorque
	Rotork
	EIM
	AUMA
Options:	Local Position Indicator

Pneumatic Actuated

Specifications:

Size:	1/2" - 4"
Class:	thru 4500
Material:	SA 105
	SA 182-F22
	SA 182-F91
	SA 182-F316
Actuator:	Fisher
	Copes-Vulcan
	Valtek
Options:	Fail Open/Fail Closed
	Manual Override
	Limit Switches
	AC or DC Solenoid

See Page 32 for Figure Number OPTION selection

常州原见能源科技有限公司
oriseen.cn

Service Tool Cross Reference

Size Code	Tool Kit	Stop	Lapping Tools Check	Lapping Tools Bonnet	Repack Tool	Yoke Wrench*	Gland Torque Wrench	Refacing Tool
3C	TK3C-C-S-1	T3C-L	T3C-LC	T3C-LB-1	T3-RP-1	T3/6-YW-1	T3-GTW-1	T3C-R
3D	TK3D-C-S-1	T3D-L	T3D-LC	T3D-LB-1	T3-RP-1	T3/6-YW-1	T3-GTW-1	T3D-R
5C	TK5C-C-S-1	T5C-L	T5C-LC	T5C-LB-1	T3-RP-1	T3/6-YW-1	T3-GTW-1	T5C-R
5D	TK5D-C-S-1	T5D-L	T5D-LC	T5C-LB-1	T3-RP-1	T3/6-YW-1	T3-GTW-1	T5D-R
5E	TK5E-C-S-1	T5EF-L	T5EF-LC	T5EF-LB-1	T5-RP-1	T3/6-YW-1	T5-GTW-1	T5E-R
5F	TK5F-C-S-1	T5EF-L	T5EF-LC	T5EF-LB-1	T5-RP-1	T3/6-YW-1	T5-GTW-1	T5F-R
5G	TK5G-C-S-1	T5G-L	T5G-LC	T5G-LB-1	T5-RP-1	T3/6-YW-1	T5-GTW-1	T5G-R
6E	TK6E-C-S-1	T6E-L	T6E-LC	T6E-LB-1	T5-RP-1	T3/6-YW-1	T5-GTW-1	T6E-R
6G	TK6G-C-S-1	T6GH-L	T6GH-LC	T6GH-LB-1	T5-RP-1	T3/6-YW-1	T5-GTW-1	T6G-R
6H	TK6H-C-S-1	T6GH-L	T6GH-LC	T6GH-LB-1	T5-RP-1	T3/6-YW-1	T5-GTW-1	T6H-R
7E	TK7E-C-S-1	T7E-L	T7E-LC	T7E-LB-1	T5-RP-1	T7/10-YW-1	T5-GTW-1	T7E-R
7F	TK7F-C-S-1	T7F-L	T7F-LC	T7F-LB-1	T7-RP-1	T7/10-YW-1	T7-GTW-1	T7F-R
7G	TK7G-C-S-1	T7GH-L	T7GH-LC	T7GH-LB-1	T7-RP-1	T7/10-YW-1	T7-GTW-1	T7G-R
7H	TK7H-C-S-1	T7GH-L	T7GH-LC	T7GH-LB-1	T7-RP-1	T7/10-YW-1	T7-GTW-1	T7H-R
7J	TK7J-C-S-1	T7J-L	T7J-LC	T7J-LB-1	T7-RP-1	T7/10-YW-1	T7-GTW-1	T7J-R
8F	TK8F-C-S-1	T8F-L	T8F-LC	T8F-LB-1	T7-RP-1	T7/10-YW-1	T7-GTW-1	T8F-R
8G	TK8G-C-S-1	T8G-L	T8G-LC	T8G-LB-1	T8-RP-1	T7/10-YW-1	T8-GTW-1	T8G-R
8H	TK8H-C-S-1	T8HJ-L	T8HJ-LC	T8HJ-LB-1	T8-RP-1	T7/10-YW-1	T8-GTW-1	T8H-R
8J	TK8J-C-S-1	T8HJ-L	T8HJ-LC	T8HJ-LB-1	T8-RP-1	T7/10-YW-1	T8-GTW-1	T8J-R
8K	TK8K-C-S-1	T8K-L	T8K-LC	T8K-LB-1	T8-RP-1	T7/10-YW-1	T8-GTW-1	T8K-R
9G	TK9G-C-S-1	T9G-L	T9G-LC	T9G-LB-1	T8-RP-1	T7/10-YW-1	T8-GTW-1	T9G-R
9H	TK9H-C-S-1	T9H-L	T9H-LC	T9H-LB-1	T8-RP-1	T7/10-YW-1	T8-GTW-1	T9H-R
9J	TK9J-C-S-1	T9JK-L	T9JK-LC	T9JK-LB-1	T9-RP-1	T7/10-YW-1	T9-GTW-1	T9J-R
9K	TK9K-C-S-1	T9JK-L	T9JK-LC	T9JK-LB-1	T9-RP-1	T7/10-YW-1	T9-GTW-1	T9K-R
9L	TK9L-C-S-1	T9L-L	T9L-LC	T9L-LB-1	T9-RP-1	T7/10-YW-1	T9-GTW-1	T9L-R
10H	TK10H-C-S-1	T10H-L	T10H-LC	T10H-LB-1	T8-RP-1	T7/10-YW-1	T8-GTW-1	T10H-R
10J	TK10J-C-S-1	T10J-L	T10J-LC	T10J-LB-1	T9-RP-1	T7/10-YW-1	T9-GTW-1	T10J-R
10K	TK10K-C-S-1	T10KL-L	T10KL-LC	T10KL-LB-1	T10-RP-1	T7/10-YW-1	T10-GTW-1	T10K-R
10L	TK10L-C-S-1	T10KL-L	T10KL-LC	T10KL-LB-1	T10-RP-1	T7/10-YW-1	T10-GTW-1	T10L-R
10M	TK10M-C-S-1	T10M-L	T10M-LC	T10M-LB-1	T10-RP-1	T7/10-YW-1	T10-GTW-1	T10M-R

* Optional snap-on torque handle available through SNAP-ON™.

常州原见能源科技有限公司
oriseen.cn

Conval Tool Kits

CLAMPSEAL® valves are designed to provide years of dependable service and to allow rapid in-line repair. Quick disconnect yoke and bonnet design provide fast access to valve trim for inspection and repair.

Conval's seat refacing tools cut through all types of seat damage leaving a smooth seat finish in minutes. Solid seats allow for repeated resurfacing.

Typical repair operations can be completed in under one hour making repair much more economical than replacement.

Conval's Tool Kits consist of:

Gland Wrench, Yoke Wrench, Seat Refacing Tool, Bonnet Lapping Tool, Repacking Tool, Lapping Compound, High Spot Blue No. 107, (2) Allen Wrenches and Servicing Instructions.

A Typical Conval Tool Kit

常州原见能源科技有限公司
oriseen.cn

Standard Parts & Material List

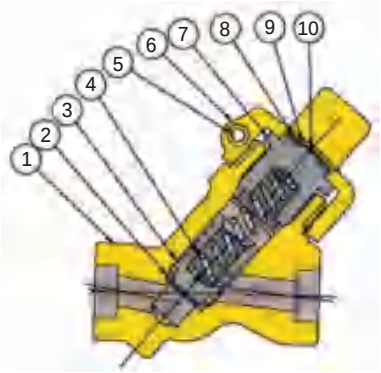

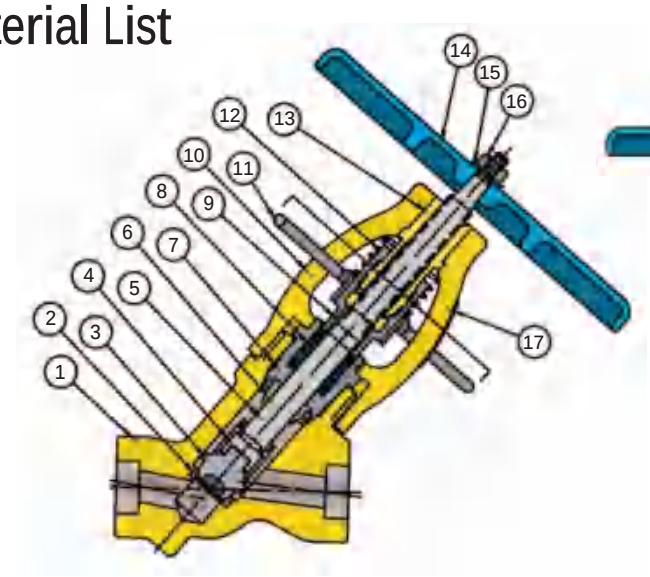

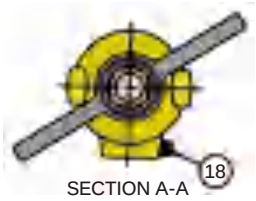

Globe Valve

No.	Name	Carbon Steel	Low Alloy	Stainless
1	Body	SA-105	SA-182 F22 or SA-182 F91	SA-182 F316
2	Seat	Cobalt Alloy-AMS 5387A	Cobalt Alloy-AMS 5387A	Cobalt Alloy-AMS 5387A
3	Disc	Cobalt Alloy-AMS 5387A	Cobalt Alloy-AMS 5387A	Cobalt Alloy-AMS 5387A
4	Retainer	ASTM A 582 416	ASTM A 582 416	SA-479 316
5	Stem	ASTM A 582 416	ASTM A 582 416	SA479-XM19H
6	Stem Guide	SA479-UNS S21800	ASTM- A732-GR21	SA479-UNS S21800
7	Bonnet/Chamber	SA479-410	SA479-410	SA479-XM19H
8	Packing	Flexible Graphite Die Formed Packing Rings Braided Carbon Yarn Wiper Rings	Flexible Graphite Die Formed Packing Rings Braided Carbon Yarn Wiper Rings	Flexible Graphite Die Formed Packing Rings Braided Carbon Yarn Wiper Rings
9	Gland	ASTM A 582 416	ASTM A 582 416	ASME SA-479 316
10	Yoke	SA-105	SA-182 F22	SA-182 F316
11	I.G.W.[2]	AMS 5370	AMS 5370	AMS 5370
12	Spring[1]	Stainless	Stainless	Stainless
13	Bushing	ASME SB-150-C64200	ASME SB-150-C64200	ASME SB-150-C64200
14	Handle/Handwheel	Malleable Iron	Malleable Iron	Malleable Iron
15	Washer[3]	Steel	Steel	Steel
16	Locknut	Steel	Steel	Steel
17	ID Plate	Stainless Steel	Stainless Steel	Stainless Steel
18	Clampbolt	Stainless	Stainless	Stainless
19	Adaptor	Malleable Iron	Malleable Iron	Malleable Iron

[2] Integral Gland Wrench
[1] Live Loaded Gland - Optional Accessory
[3] Retainer Washer required with sizes 8, 9 and 10

Check Valve

No.	Name	Carbon Steel	Low Alloy	Stainless
1	Body	SA-105	SA-182 F22, SA-182 F91	SA-182 F316
2	Seat	Cobalt Alloy-AMS 5387A	Cobalt Alloy-AMS 5387A	Cobalt Alloy-AMS 5387A
3	Piston	Cobalt Alloy-AMS 5387A	Cobalt Alloy-AMS 5387A	Cobalt Alloy-AMS 5387A
4	Spring	Inconel X No. 1 Temper	Inconel X No. 1 Temper	Inconel X No. 1 Temper
5	Clampbolt	Stainless	Stainless	Stainless
6	Yoke	SA-105	SA-182 F22	SA-182 F316
7	Bonnet	SA479-XM-19H	SA479-XM-19H	SA479-XM-19H
8	ID Plate	Stainless Steel	Stainless Steel	Stainless Steel
9	Washer	Steel	Steel	Steel
10	Rivet	Steel	Steel	Steel

常州原见能源科技有限公司
oriseen.cn

Figure Number Description

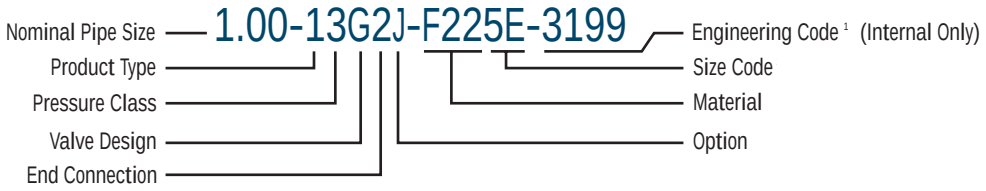

VALVE DESIGN

A Angle Pattern Stop
B Tandem Blowdown:
2 Angle Bodies
C Y-Pattern Check
D Angle Pattern Check
E T-Pattern Check
F Gate
G Y-Pattern Stop
H Bellows Seal
J Cryogenic
K Tandem Bowdown:
1 Angle Body, 1 Y-Pattern
L Leak Off
N Continuous Blowdown
P T-Pattern Stop
R Y-Pattern Stop Check
S Angle Pattern Stop Check
T T-Pattern Stop Check
U Throttling
V Tandem Blowdown:
2 Y-Pattern Bodies
W Strainer W/Blowoff Valve
X Strainer W/Blowoff Fitting
Y Strainer
Z 3-Way
1 Bonnetless
2 Tandem Blowdown:
1- Ball Valve
1-Throttling Valve
8 Hemiseal Ball Valve
9 Camseal Ball Valve

PRODUCT TYPE

1 Globe Valve
2 Whisperjet
3 Y-Body - Extended Body
4 Desuperheater
5 Gate
8 Ball

ASME PRESSURE CLASS

	Nominal	Intermediate
0	Under 900	
1	900	1195
2	1500	2155
3	2500	3045
4	3500	4095
8	4500	

END CONNECTIONS

1 Threaded
2 Socket Weld Full Port
3 Socket Weld Reduced Port
4 Butt Weld Full Port
5 Butt Weld Reduced Port
6 But Weld Double Reduced Port
7 Clamp Connector
8 Flanged - Standard
9 Flanged - Special
0 Other

OPTIONS

A AUMA Actuator
B EIM Actuator
C Handwheel
D Fisher Actuator
E Orifice Port
F Micrometer Dial
G Bendix Actuator
H Spinner Handle
J I.G.W.
K Drain Connection
L Locking Handle
M Stem Shroud
N Copes Actuator
P Limitorque Actuator
Q L.L.G. W/I.G.W.
R Rotork Actuator
S Single Limitswitch
T Ball Check
U Double Limitswitch
V Valtek Actuator
W Needle Disc
X Chain Wheel
Y Conval Actuator
Z Other

MATERIAL

Carbon

105 Standard
A05 Stainless Steel Internals
B05 Ductile Iron Bushing
C05 17-4 PH Stem
E05 Monel Trim
N05 Navy Special
S05 Cobalt Free
P05 Polymer Trim
R05 N60 Bushing

Alloy

F22 Standard
F91 Standard
A22 Stainless Steel Internals
B22 Ductile Iron Bushing
C22 F22 Body /A105 Yoke
E22 Monel Trim
N22 Navy Special
S22 Cobalt Free
P22 Polymer Trim
R22 N60 Bushing

Stainless

316 Standard
B16 Ductile Iron Bushing
D16 316 Body Only
E16 Monel Trim
L16 316L Body
N16 Navy Special
S16 Cobalt Free
P16 Polymer Trim
R16 N60 Bushing

[1] Engineering Code assigned by Conval is a key to Engineering Bill of Material and will appear on all packing lists and invoices. This code need not be supplied when ordering unless a specific configuration is being reorderd.

常州原见能源科技有限公司
oriseen.cn

Working Pressure by Class, PSIG

	Limited Class 1/2 - 2 1/2" Socket Weld, Butt Weld[3] Pressure Ratings					Standard Class 1/2 - 4" Socket Weld, Butt Weld[3] Pressure Ratings					Special Class* 1/2 - 4" Socket Weld, Butt Weld[3] Pressure Ratings				
NOMINAL	900	1500	2500	3500	4500	900	1500	2500	3500	4500	900	1500	2500	3500	4500
INTERMEDIATE	1195	2155	3045	4095	4500	1195	2155	3045	4095	4500	1195	2155	3045	4095	4500
SA 182-F22[1] Temp F°															
100	2988	5388	7613	10238	11250	2988	5388	7613	10238	11250	2988	5388	7613	10238	11250
200	2988	5388	7613	10238	11250	2988	5388	7613	10238	11250	2988	5388	7613	10238	11250
300	2953	5326	7526	10120	11120	2900	5232	7393	9942	10925	2953	5326	7526	10120	11120
400	2886	5202	7351	9887	10865	2811	5069	7162	9632	10585	2886	5202	7351	9887	10865
500	2868	5172	7308	9828	10800	2649	4776	6746	9069	9965	2868	5172	7308	9828	10800
600	2868	5172	7308	9828	10800	2410	4345	6138	8254	9070	2868	5172	7308	9828	10800
650	2851	5142	7265	9769	10735	2343	4227	5973	8031	8825	2851	5142	7265	9769	10735
700	2833	5111	7222	9710	10670	2263	4078	5761	7749	8515	2833	5111	7222	9710	10670
750	2749	4957	7004	9419	10350	2119	3819	5395	7253	7970	2749	4957	7004	9419	10350
800	2681	4832	6829	9186	10095	2024	3647	5151	6926	7610	2681	4832	6829	9186	10095
850	2562	4617	6524	8776	9645	1939	3499	4944	6648	7305	2562	4617	6524	8776	9645
900	2390	4310	6090	8190	9000	1790	3228	4561	6134	6740	2390	4310	6090	8190	9000
950	1910	3495	5003	6834	7556	1501	2710	3832	5155	5665	1877	3387	4786	6434	7070
1000	1367	2579	3802	5392	6052	1038	1872	2644	3558	3910	1297	2341	3306	4446	4885
1050	918	1730	2550	3619	4064	697	1255	1774	2388	2625	871	1570	2217	2984	3280
1100	574	1086	1602	2269	2546	438	789	1114	1497	1645	545	986	1393	1871	2055
SA 105[2]															
100	2988	5388	7613	10238	11250	2958	5320	7516	10110	11110	2988	5388	7613	10238	11250
200	2988	5388	7613	10238	11250	2696	4849	6850	9210	10120	2988	5388	7613	10238	11250
300	2988	5388	7613	10238	11250	2621	4714	6662	8959	9845	2988	5388	7613	10238	11250
400	2988	5388	7613	10238	11250	2531	4552	6431	8649	9505	2988	5388	7613	10238	11250
500	2988	5388	7613	10238	11250	2391	4302	6077	8172	8980	2988	5388	7613	10238	11250
600	2841	5121	7234	9728	10690	2184	3930	5555	7471	8210	2841	5121	7234	9728	10690
650	2786	5021	7095	9541	10485	2144	3857	5451	7330	8055	2786	5021	7095	9541	10485
700	2763	4983	7040	9468	10405	2129	3828	5407	7271	7990	2763	4983	7040	9468	10405
750	2510	4526	6395	8600	9450	2012	3620	5116	6880	7560	2510	4526	6395	8600	9450
800	2049	3693	5220	7020	7715	1645	2957	4177	5615	6170	2049	3693	5220	7020	7715
SA 182-F316															
100	2988	5388	7613	10238	11250	2868	5172	7308	9828	10800	2988	5388	7613	10238	11250
200	2749	4957	7004	9419	10350	2467	4448	6285	8454	9290	2749	4957	7004	9419	10350
300	2485	4482	6334	8518	9360	2228	4017	5676	7635	8390	2485	4482	6334	8518	9360
400	2271	4095	5786	7781	8550	2046	3690	5213	7011	7705	2271	4095	5786	7781	8550
500	2116	3818	5395	7253	7970	1904	3431	4848	6520	7165	2116	3818	5395	7253	7970
600	2007	3617	5111	6875	7555	1797	3241	4580	6160	6770	2007	3617	5111	6875	7555
650	1964	3539	5002	6729	7395	1767	3189	4507	6061	6660	1964	3539	5002	6729	7395
700	1929	3478	4915	6611	7265	1730	3120	4409	5929	6515	1929	3478	4915	6611	7265
750	1895	3418	4829	6493	7135	1700	3068	4337	5833	6410	1895	3418	4829	6493	7135
800	1877	3387	4786	6434	7070	1680	3034	4287	5765	6335	1877	3387	4786	6434	7070
850	1857	3349	4731	6361	6990	1665	3000	4239	5701	6265	1857	3349	4731	6361	6990
900	1845	3324	4697	6319	6945	1653	2982	4215	5669	6230	1845	3324	4697	6319	6945
950	1825	3289	4647	6251	6870	1538	2775	3922	5274	5795	1825	3289	4647	6251	6870
[4]1000	1675	3022	4269	5742	6310	1394	2513	3550	4773	5245	1675	3022	4269	5742	6310
1050	1675	3022	4269	5742	6310	1369	2470	3489	4691	5155	1675	3022	4269	5742	6310
1100	1544	2827	4048	5528	6113	1215	2193	3098	4164	4575	1519	2740	3872	5206	5720
1150	1241	2341	3451	4895	5495	944	1699	2401	3230	3550	1178	2125	3002	4036	4435
1200	971	1831	2702	3830	4299	736	1331	1880	2526	2775	921	1663	2350	3158	3470
1250	774	1458	2151	3050	3426	585	1059	1497	2012	2210	734	1323	1870	2516	2765

F22 not recommended for prolonged use above 1100ºF.
[2] A105 not recommended for prolonged use above 800ºF.
[3] Refer to class descriptions for other applications.
[4] Above 1000ºF, consult factory.

Based on ASME B16.34 - 1996 with ANNEX G.
* NDE is required for special class ratings.
Threaded, flanged and gate valves nominally rated.

常州原见能源科技有限公司
oriseen.cn

Working Pressure by Class, BARS

	Limited Class 1/2 - 2 1/2" Socket Weld, Butt Weld3 Pressure Ratings					Standard Class 1/2 - 4" Socket Weld, Butt Weld3 Pressure Ratings					Special Class* 1/2 - 4" Socket Weld, Butt Weld3 Pressure Ratings				
NOMINAL	PN150	PN260	PN420	PN590	PN760	PN150	PN260	PN420	PN590	PN760	PN150	PN260	PN420	PN590	PN760
INTERMEDIATE	PN204	PN365	PN513	PN691		PN204	PN365	PN513	PN691		PN204	PN365	PN513	PN691	
SA 182-F22 1 Temp C°															
38	206	372	525	706	776	206	372	525	706	776	206	372	525	706	776
93	206	372	525	706	776	206	372	525	706	776	206	372	525	706	776
149	204	367	519	698	767	200	361	510	686	754	204	367	519	698	767
204	199	359	507	682	750	194	350	494	665	730	199	359	507	682	750
260	198	357	504	678	745	183	330	465	626	688	198	357	504	678	745
316	198	357	504	678	745	166	300	424	570	626	198	357	504	678	745
343	197	355	501	674	741	162	292	412	554	609	197	355	501	674	741
371	195	353	498	670	736	156	281	398	535	588	195	353	498	670	736
399	190	342	483	650	714	146	264	372	500	550	190	342	483	650	714
427	185	333	471	634	697	140	252	355	478	525	185	333	471	634	697
454	177	319	450	606	666	134	241	341	459	504	177	319	450	606	666
482	165	297	420	565	621	124	223	315	423	465	165	297	420	565	621
510	132	241	345	472	521	104	187	264	356	391	130	234	330	444	488
538	94	178	262	372	418	72	129	182	246	270	89	162	228	307	337
566	63	119	176	250	280	48	87	122	165	181	60	108	153	206	226
593	40	75	111	157	176	30	54	77	103	114	38	68	96	129	142
SA 105 2															
38	206	372	525	706	776	204	367	519	698	767	206	372	525	706	776
93	206	372	525	706	776	186	335	473	635	698	206	372	525	706	776
149	206	372	525	706	776	181	325	460	618	679	206	372	525	706	776
204	206	372	525	706	776	175	314	444	597	656	206	372	525	706	776
260	206	372	525	706	776	165	297	419	564	620	206	372	525	706	776
316	196	353	499	671	738	151	271	383	515	566	196	353	499	671	738
343	192	346	490	658	723	148	266	376	506	556	192	346	490	658	723
371	191	344	486	653	718	147	264	373	502	551	191	344	486	653	718
399	173	312	441	593	652	139	250	353	475	522	173	312	441	593	652
427	141	255	360	484	532	114	204	288	387	426	141	255	360	484	532
SA 182-F316															
38	206	372	525	706	776	198	357	504	678	745	206	372	525	706	776
93	190	342	483	650	714	170	307	434	583	641	190	342	483	650	714
149	171	309	437	588	646	154	277	392	527	579	171	309	437	588	646
204	157	283	399	537	590	141	255	360	484	532	157	283	399	537	590
260	146	263	372	500	550	131	237	335	450	494	146	263	372	500	550
316	138	250	353	474	521	124	224	316	425	467	138	250	353	474	521
343	136	244	345	464	510	122	220	311	418	460	136	244	345	464	510
371	133	240	339	456	501	119	215	304	409	450	133	240	339	456	501
399	131	236	333	448	492	117	212	299	402	442	131	236	333	448	492
427	130	234	330	444	488	116	209	296	398	437	130	234	330	444	488
454	128	231	326	439	482	115	207	292	393	432	128	231	326	439	482
482	127	229	324	436	479	114	206	291	391	430	127	229	324	436	479
510	126	227	321	431	474	106	191	271	364	400	126	227	321	431	474
538	116	209	295	396	435	96	173	245	329	362	116	209	295	396	435
566	116	209	295	396	435	94	170	241	324	356	116	209	295	396	435
593	107	195	279	381	422	84	151	214	287	316	105	189	267	359	395
621	86	162	238	338	379	65	117	166	223	245	81	147	207	278	306
649	67	126	186	264	297	51	92	130	174	191	64	115	162	218	239
677	53	101	148	210	236	40	73	103	139	152	51	91	129	174	191

F22 not recommended for prolonged use above 593 C.
2 A105 not recommended for prolonged use above 427 C.
3 Refer to class descriptions for other applications.
4 Above 538 consult factory.

Based on ASME B16.34 - 1996 with ANNEX G.
* NDE is required for special class ratings.
Threaded, flanged and gate valves nominally rated.

常州原见能源科技有限公司
oriseen.cn

F91 Forgings
B16.34-2004 Limited Class (Table 2-1.15B) and Appendix V-2.1.3 (ferritic steel)
Working Pressures by Classes, psig

Nominal	900	1500	2500	3500	4500
Intermediate Temp F°	1195	2155	3045	4095	4500
-20 to 100	2988	5388	7613	10238	11250
150	2988	5388	7613	10238	11250
200	2988	5388	7613	10238	11250
250	2988	5388	7613	10238	11250
300	2988	5388	7613	10238	11250
350	2988	5388	7613	10238	11250
400	2988	5388	7613	10238	11250
450	2988	5388	7613	10238	11250
500	2988	5388	7613	10238	11250
550	2988	5388	7613	10238	11250
600	2988	5388	7613	10238	11250
625	2988	5388	7613	10238	11250
650	2988	5388	7613	10238	11250
675	2954	5327	7527	10122	11123
700	2920	5266	7441	10006	10995
725	2912	5250	7418	9976	10963
750	2903	5233	7394	9946	10930
775	2885	5203	7351	9887	10865
800	2868	5172	7308	9828	10800
825	2782	5019	7092	9537	10480
850	2696	4865	6875	9246	10160
875	2543	4588	6483	8718	9580
900	2390	4310	6090	8190	9000
925	2152	3906	5557	7520	8278
950	1914	3502	5024	6851	7556
975	1843	3424	4969	6836	7556
1000	1772	3347	4915	6821	7556
1025	1772	3347	4915	6821	7556
1050	1772	3347	4915	6821	7556
1075	1680	3175	4693	6561	7281
1100	1588	3002	4472	6301	7006
1125	1381	2609	3887	5478	6092
1150	1174	2216	3302	4656	5179
1175	966	1824	2718	3832	4262
1200	758	1432	2134	3008	3345

F91 Forgings
B16.34-2004 Standard Class (Table 2-1.15A)
Working Pressures by Classes, psig

Nominal	900	1500	2500	3500	4500
Intermediate Temp F°	1195	2155	3045	4095	4500
-20 to 100	2988	5388	7613	10238	11250
150	2988	5388	7613	10238	11250
200	2988	5388	7613	10238	11250
250	2944	5310	7503	10090	11088
300	2900	5232	7393	9942	10925
350	2856	5150	7278	9787	10755
400	2811	5069	7162	9632	10585
450	2730	4923	6954	9351	10275
500	2649	4776	6746	9069	9965
550	2529	4560	6442	8661	9518
600	2410	4345	6138	8254	9070
625	2376	4286	6056	8143	8948
650	2343	4227	5973	8031	8825
675	2303	4153	5867	7890	8670
700	2263	4078	5761	7749	8515
725	2191	3949	5578	7501	8243
750	2119	3819	5395	7253	7970
775	2071	3733	5273	7089	7790
800	2024	3647	5151	6926	7610
825	1982	3573	5048	6787	7458
850	1939	3499	4944	6648	7305
875	1865	3363	4753	6391	7023
900	1790	3228	4561	6134	6740
925	1664	3001	4241	5704	6268
950	1539	2775	3922	5274	5795
975	1494	2694	3806	5117	5623
1000	1449	2613	3689	4960	5450
1025	1441	2599	3672	4937	5425
1050	1434	2586	3654	4914	5400
1075	1318	2377	3358	4516	4963
1100	1202	2168	3063	4118	4525
1125	1046	1884	2662	3581	3935
1150	889	1600	2261	3043	3345
1175	731	1317	1861	2504	2753
1200	573	1034	1462	1966	2160

F91 Forgings
B16.34-2004 Special Class (Table 2-1.15B)
Working Pressures by Classes, psig

Nominal	900	1500	2500	3500	4500
Intermediate Temp F°	1195	2155	3045	4095	4500
-20 to 100	2988	5388	7613	10238	11250
150	2988	5388	7613	10238	11250
200	2988	5388	7613	10238	11250
250	2988	5388	7613	10238	11250
300	2988	5388	7613	10238	11250
350	2988	5388	7613	10238	11250
400	2988	5388	7613	10238	11250
450	2988	5388	7613	10238	11250
500	2988	5388	7613	10238	11250
550	2988	5388	7613	10238	11250
600	2988	5388	7613	10238	11250
625	2988	5388	7613	10238	11250
650	2988	5388	7613	10238	11250
675	2954	5327	7527	10122	11123
700	2920	5266	7441	10006	10995
725	2912	5250	7418	9976	10963
750	2903	5233	7394	9946	10930
775	2885	5203	7351	9887	10865
800	2868	5172	7308	9828	10800
825	2782	5019	7092	9537	10480
850	2696	4865	6875	9246	10160
875	2543	4588	6483	8718	9580
900	2390	4310	6090	8190	9000
925	2135	3849	5438	7312	8035
950	1880	3388	4786	6434	7070
975	1778	3205	4528	6088	6690
1000	1675	3022	4269	5742	6310
1025	1675	3022	4269	5742	6310
1050	1675	3022	4269	5742	6310
1075	1588	2866	4049	5444	5983
1100	1501	2710	3829	5147	5655
1125	1306	2356	3328	4475	4918
1150	1110	2001	2827	3803	4180
1175	914	1647	2327	3130	3440
1200	717	1293	1827	2457	2700

This chart shows the allowable pressure for any temperature within the range of this material. The temperatures in black are set by code. Simply cross reference the actual temperature of the service being considered for the temperature in red which is closest in value to it. The allowable pressures for each pressure class of valve will be shown on the chart.

F92 Forgings
Limited Class (Calculated per Appendix B, Appendix V-2.1.3 & Code case 2179-4)
Working Pressures by Classes, psig

Nominal	900	1500	2500	3500	4500
Intermediate Temp F°	1195	2155	3045	4095	4500
-20 to 100	2988	5388	7613	10238	11250
150	2988	5388	7613	10238	11250
200	2988	5388	7613	10238	11250
250	2988	5388	7613	10238	11250
300	2988	5388	7613	10238	11250
350	2988	5388	7613	10238	11250
400	2988	5388	7613	10238	11250
450	2988	5388	7613	10238	11250
500	2988	5388	7613	10238	11250
550	2988	5388	7613	10238	11250
600	2988	5388	7613	10238	11250
625	2988	5388	7613	10238	11250
650	2988	5388	7613	10238	11250
675	2954	5327	7527	10122	11123
700	2920	5266	7441	10006	10995
725	2912	5250	7418	9976	10963
750	2903	5233	7394	9946	10930
775	2885	5203	7351	9887	10865
800	2868	5172	7308	9828	10800
825	2782	5019	7092	9537	10480
850	2696	4865	6875	9246	10160
875	2543	4588	6483	8718	9580
900	2390	4310	6090	8190	9000
925	2152	3906	5557	7520	8278
950	1914	3502	5024	6851	7556
975	1843	3424	4969	6836	7556
1000	1772	3347	4915	6821	7556
1025	1772	3347	4915	6821	7556
1050	1772	3347	4915	6821	7556
1075	1735	3278	4847	6778	7523
1100	1699	3208	4779	6735	7489
1125	1572	2969	4423	6234	6932
1150	1446	2730	4067	5732	6374

F92 Forgings
Standard Class (Calculated per Appendix B & Code case 2179-4)
Working Pressures by Classes, psig

Nominal	900	1500	2500	3500	4500
Intermediate Temp F°	1195	2155	3045	4095	4500
-20 to 100	2988	5388	7613	10238	11250
150	2988	5388	7613	10238	11250
200	2988	5388	7613	10238	11250
250	2944	5310	7503	10090	11088
300	2900	5232	7393	9942	10925
350	2856	5150	7278	9787	10755
400	2811	5069	7162	9632	10585
450	2730	4923	6954	9351	10275
500	2649	4776	6746	9069	9965
550	2529	4560	6442	8661	9518
600	2410	4345	6138	8254	9070
625	2376	4286	6056	8143	8948
650	2343	4227	5973	8031	8825
675	2303	4153	5867	7890	8670
700	2263	4078	5761	7749	8515
725	2191	3949	5578	7501	8243
750	2119	3819	5395	7253	7970
775	2071	3733	5273	7089	7790
800	2024	3647	5151	6926	7610
825	1982	3573	5048	6787	7458
850	1939	3499	4944	6648	7305
875	1865	3363	4753	6391	7023
900	1790	3228	4561	6134	6740
925	1664	3001	4241	5704	6268
950	1539	2775	3922	5274	5795
975	1494	2694	3806	5117	5623
1000	1449	2613	3689	4960	5450
1025	1441	2599	3672	4937	5425
1050	1434	2586	3654	4914	5400
1075	1358	2450	3462	4657	5118
1100	1282	2314	3271	4400	4835
1125	1188	2142	3027	4072	4475
1150	1093	1969	2784	3744	4115

F92 Forgings
Special Class (Calculated per Appendix B & Code case 2179-4)
Working Pressures by Classes, psig

Nominal	900	1500	2500	3500	4500
Intermediate Temp F°	1195	2155	3045	4095	4500
-20 to 100	2988	5388	7613	10238	11250
150	2988	5388	7613	10238	11250
200	2988	5388	7613	10238	11250
250	2988	5388	7613	10238	11250
300	2988	5388	7613	10238	11250
350	2988	5388	7613	10238	11250
400	2988	5388	7613	10238	11250
450	2988	5388	7613	10238	11250
500	2988	5388	7613	10238	11250
550	2988	5388	7613	10238	11250
600	2988	5388	7613	10238	11250
625	2988	5388	7613	10238	11250
650	2988	5388	7613	10238	11250
675	2954	5327	7527	10122	11123
700	2920	5266	7441	10006	10995
725	2912	5250	7418	9976	10963
750	2903	5233	7394	9946	10930
775	2885	5203	7351	9887	10865
800	2868	5172	7308	9828	10800
825	2782	5019	7092	9537	10480
850	2696	4865	6875	9246	10160
875	2543	4588	6483	8718	9580
900	2390	4310	6090	8190	9000
925	2135	3849	5438	7312	8035
950	1880	3388	4786	6434	7070
975	1778	3205	4528	6088	6690
1000	1675	3022	4269	5742	6310
1025	1675	3022	4269	5742	6310
1050	1675	3022	4269	5742	6310
1075	1641	2959	4181	5622	6178
1100	1606	2896	4092	5501	6045
1125	1486	2680	3787	5092	5595
1150	1715	2465	3483	4682	5145

常州原见能源科技有限公司
oriseen.cn

F91 Forgings
B16.34-2004 Limited Class (Table 2-1.15B) and Appendix V-2.1.3 (ferritic steel)
Working Pressures by Classes, bar

Nominal Intermediate Temp C°	PN150 PN204	PN260 PN365	PN420 PN513	PN590 PN691	PN760
-29 to 38	206	372	525	604	776
66	206	372	525	604	776
93	206	372	525	604	776
121	206	372	525	604	776
149	206	372	525	604	776
177	206	372	525	604	776
204	206	372	525	604	776
232	206	372	525	604	776
260	206	372	525	604	776
288	206	372	525	604	776
316	206	372	525	604	776
329	206	372	525	604	776
343	206	372	525	604	776
357	204	368	519	597	767
371	202	363	513	590	759
385	201	362	512	588	756
399	200	361	510	587	754
413	199	359	507	583	750
427	198	357	504	580	745
441	192	346	489	562	723
454	186	336	474	545	701
468	175	317	447	514	661
482	165	297	420	483	621
496	149	269	383	442	571
510	132	242	347	401	521
524	127	236	343	399	521
538	122	231	339	396	521
552	122	231	339	396	521
566	122	231	339	396	521
579	116	219	324	380	502
593	110	207	309	363	483
607	95	180	268	316	420
621	81	153	228	268	357
635	67	126	188	221	294
649	52	99	147	173	231

F91 Forgings
B16.34-2004 Standard Class (Table 2-1.15A)
Working Pressures by Classes, bar

Nominal Intermediate Temp C°	PN150 PN204	PN260 PN365	PN420 PN513	PN590 PN691	PN760
-29 to 38	206	372	525	604	776
66	206	372	525	604	776
93	206	372	525	604	776
121	203	366	518	595	765
149	200	361	510	586	754
177	197	355	502	577	742
204	194	350	494	568	730
232	188	340	480	551	709
260	183	330	465	535	688
288	175	315	444	511	657
316	166	300	424	487	626
329	164	296	418	480	617
343	162	292	412	474	609
357	159	287	405	465	598
371	156	281	398	457	588
385	151	272	385	442	569
399	146	264	372	428	550
413	143	258	364	418	538
427	140	252	355	408	525
441	137	247	348	400	515
454	134	241	341	392	504
468	129	232	328	377	485
482	124	223	315	362	465
496	115	207	293	336	432
510	106	191	271	311	400
524	103	186	263	302	388
538	100	180	255	293	376
552	99	179	253	291	374
566	99	178	252	290	373
579	91	164	232	266	342
593	83	150	211	243	312
607	72	130	184	211	272
621	61	110	156	179	231
635	50	91	128	148	190
649	40	71	101	116	149

F91 Forgings
B16.34-2004 Special Class (Table 2-1.15B)
Working Pressures by Classes, bar

Nominal Intermediate Temp C°	PN150 PN204	PN260 PN365	PN420 PN513	PN590 PN691	PN760
-29 to 38	206	372	525	604	776
66	206	372	525	604	776
93	206	372	525	604	776
121	206	372	525	604	776
149	206	372	525	604	776
177	206	372	525	604	776
204	206	372	525	604	776
232	206	372	525	604	776
260	206	372	525	604	776
288	206	372	525	604	776
316	206	372	525	604	776
329	206	372	525	604	776
343	206	372	525	604	776
357	204	368	519	597	767
371	202	363	513	590	759
385	201	362	512	588	756
399	200	361	510	587	754
413	199	359	507	583	750
427	198	357	504	580	745
441	192	346	489	562	723
454	186	336	474	545	701
468	175	317	447	514	661
482	165	297	420	483	621
496	147	266	375	431	554
510	130	234	330	380	488
524	123	221	312	359	462
538	116	209	295	339	435
552	116	209	295	339	435
566	116	209	295	339	435
579	110	198	279	321	413
593	104	187	264	304	390
607	90	163	230	264	339
621	77	138	195	224	288
635	63	114	161	185	237
649	49	89	126	145	186

F92 Forgings
Limited Class (Calculated per Appendix B, Appendix V-2.1.3 & Code case 2179-4)
Working Pressures by Classes, psig

Nominal Intermediate Temp C°	PN150 PN204	PN260 PN365	PN420 PN513	PN590 PN691	PN760
-29 to 38	206	372	525	604	776
66	206	372	525	604	776
93	206	372	525	604	776
121	206	372	525	604	776
149	206	372	525	604	776
177	206	372	525	604	776
204	206	372	525	604	776
232	206	372	525	604	776
260	206	372	525	604	776
288	206	372	525	604	776
316	206	372	525	604	776
329	206	372	525	604	776
343	206	372	525	604	776
357	204	368	519	597	767
371	202	363	513	590	759
385	201	362	512	588	756
399	200	361	510	587	754
413	199	359	507	583	750
427	198	357	504	580	745
441	192	346	489	562	723
454	186	336	474	545	701
468	175	317	447	514	661
482	165	297	420	483	621
496	149	269	383	442	571
510	132	242	347	401	521
524	127	236	343	399	521
538	122	231	339	396	521
552	122	231	339	396	521
566	122	231	339	396	521
579	120	226	334	392	519
593	117	221	330	388	517
607	108	205	305	359	478
621	100	188	281	330	440

F92 Forgings
Standard Class (Calculated per Appendix B & Code case 2179-4)
Working Pressures by Classes, bar

Nominal Intermediate Temp C°	PN150 PN204	PN260 PN365	PN420 PN513	PN590 PN691	PN760
-29 to 38	206	372	525	604	776
66	206	372	525	604	776
93	206	372	525	604	776
121	203	366	518	595	765
149	200	361	510	586	754
177	197	355	502	577	742
204	194	350	494	568	730
232	188	340	480	551	709
260	183	330	465	535	688
288	175	315	444	511	657
316	166	300	424	487	626
329	164	296	418	480	617
343	162	292	412	474	609
357	159	287	405	465	598
371	156	281	398	457	588
385	151	272	385	442	569
399	146	264	372	428	550
413	143	258	364	418	538
427	140	252	355	408	525
441	137	247	348	400	515
454	134	241	341	392	504
468	129	232	328	377	485
482	124	223	315	362	465
496	115	207	293	336	432
510	106	191	271	311	400
524	103	186	263	302	388
538	100	180	255	293	376
552	99	179	253	291	374
566	99	178	252	290	373
579	94	169	239	275	353
593	88	160	226	259	334
607	82	148	209	240	309
621	75	136	192	221	284

F92 Forgings
Special Class (Calculated per Appendix B & Code case 2179-4)
Working Pressures by Classes, psig

Nominal Intermediate Temp C°	PN150 PN204	PN260 PN365	PN420 PN513	PN590 PN691	PN760
-29 to 38	206	372	525	604	776
66	206	372	525	604	776
93	206	372	525	604	776
121	206	372	525	604	776
149	206	372	525	604	776
177	206	372	525	604	776
204	206	372	525	604	776
232	206	372	525	604	776
260	206	372	525	604	776
288	206	372	525	604	776
316	206	372	525	604	776
329	206	372	525	604	776
343	206	372	525	604	776
357	204	368	519	597	767
371	202	363	513	590	759
385	201	362	512	588	756
399	200	361	510	587	754
413	199	359	507	583	750
427	198	357	504	580	745
441	192	346	489	562	723
454	186	336	474	545	701
468	175	317	447	514	661
482	165	297	420	483	621
496	147	266	375	431	554
510	130	234	330	380	488
524	123	221	312	359	462
538	116	209	295	339	435
552	116	209	295	339	435
566	116	209	295	339	435
579	113	204	288	332	426
593	111	200	282	324	417
607	103	185	261	300	386
621	94	170	240	276	355

This chart shows the allowable pressure for any temperature within the range of this material.
The temperatures in black are set by code. Simply cross reference the actual temperature of the service being considered for the temperature in red which is closest in value to it. The allowable pressures for each pressure class of valve will be shown on the chart.
Note: F92 is not listed in ASME B16.34. It is covered in the ASME Boiler and Pressure Vessel Code under Code Case 2179-4. Mechanical properties and SA values at temperature are listed in the Code Case and have been used to derive the above pressure-temperature ratings. Due to the extremely high strengt "of F92 at temperature, these ratings are identical to the ceiling values defined in Appendix B of B16.34

常州原见能源科技有限公司
oriseen.cn

ASME Class and Ratings

ASME B16.34 incorporates socket weld end valves and butt weld end valves with Limited Class ratings. Conval offers the industry's finest forged steel globe valve with the highest ratings available. ASME Limited Class Rating applies to 2 1/2" and smaller valves only and allows use of ASME Special Class Tables without NDE.

Standard Class

Standard class is a general use classification which uses the ASME Standard Class pressure temperature tables from B16.34. No NDE or special analysis is required. Standard Class provides the lowest (most conservative) ratings.

- Application: Socket Weld, Butt Weld, Threaded End & Flanged valves (Flanged and Threaded End ratings terminate at 1000°F).
  - NPS 1/2 to 4"
  - No NDE Required
- Valve Marking: B16.34 STD

Limited Class

Limited class is a rating which allows small (NPS 2 1/2" or smaller) socket weld valves to be rated to the higher ASME Special Class pressure-temperature tables as well as Annex G from B16.34.

No NDE is required but special engineering analysis must be completed prior to assigning this rating (This has been completed for all CLAMPSEAL® valves). Limited Class provides ratings which are much higher than Standard Class, and in some cases above 900ºF are slightly higher than Special Class ratings.

- Application: Socket Weld and Butt Weld End Valves
  - NPS 1/2 to 2 1/2"
  - No NDE Required
- Valve Marking: B16.34 LTD

Special Class

Special class ratings using the tables from ASME B16.34 can be applied to any forged steel valve.

- Application: Socket Weld, Butt Weld, and Threaded End valves
  - NPS 1/2 to 4"
- NDE Requirements Body and Bonnet:
  - Volumetric Exam: Radiographic or Ultrasonic Testing
  - Surface Exam: Liquid Penetrant or Magnetic Particle
- Valve Marking: B16.34 SPL

Nominal Ratings

The ASME B16.34 tables list nominal ratings, i.e., 1500, 2500, 4500. The actual class number (1500) leads to a table or graph of pressure-temperature rating pairs.

To meet nominal rating requirements, valves must satisfy certain wall and hub thickness requirements which are derived from the maximum stress allowed in a given material. These requirements have been met for all CLAMPSEAL® valves.

CLAMPSEAL® valves which exceed the wall thickness requirements may use the excess wall thickness to increase their service rating. These enhanced ratings are called intermediate ratings. Interpolating between the wall required for a class 1500 and a class 2500 valve allows Conval to intermediate rate its 1500 nominal valves to 2155.

Example: an F22 ASME 2155 LTD valve is rated for 1086 PSIG at 1100ºF but only 550 PSIG for 1500 Standard class.

Standard, Limited, or Special Class valves may be rated to either Nominal or Intermediate Ratings.

Ball valves, Gate Valves and Threaded End Valves are nominal ASME B16.34 rated. Consult factory for other ratings.

Note: Flanged valves may not be intermediate rated. Maximum flanged and threaded valve rating is 2500.

常州原见能源科技有限公司
oriseen.cn

Applications

- The modular design of the Clampseal valve family allows for easy customization to provide a wide range of special materials, design options and accessories to match your service requirements.
- Valve configurations are available for many plants and applications including those listed here:
  - Fossil power
  - Nuclear power
  - Refineries
  - Petro chemical plants
  - Chemical plants
  - Gas separation
  - Pulp and paper plants
  - Recovery boilers
  - Marine boilers
  - Cryogenic systems
  - Oil patch steam injection
  - Thin gas service
  - Water treatment
  - Hydraulic systems
- Conval's QA program ensures that every component receives the same control as our ASME III nuclear equipment.
- Each order is reviewed by sales engineers to ensure compatibility with your application.

- Main Steam Lines
- Instrumentation
- Vents
- Drains
- Boiler Drums
- Superheaters–Steam Header
- Desuperheaters
- Turbine Generators
- Compressors
- Steam Condensers
- Chemical Fuel Lines
- Economizer
- Gauge Shut-off
- Blow-down (Continuous)
- Reheater – Inlet Header Drain
- Reheater – Outlet Header Drain
- Auxiliary Steam Main
- Water Column Shut-off
- Water Sampling
- Steam Sampling
- Steam Gauge Test
- Test Loop

常州原见能源科技有限公司
oriseen.cn

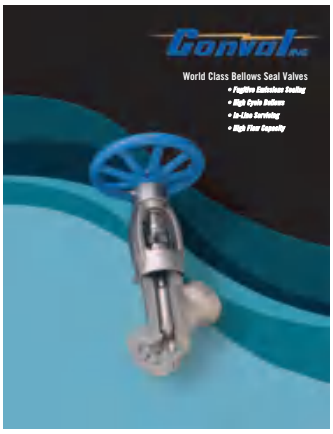

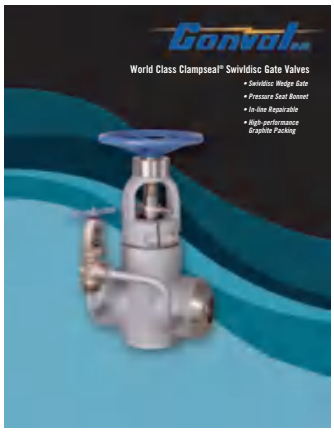

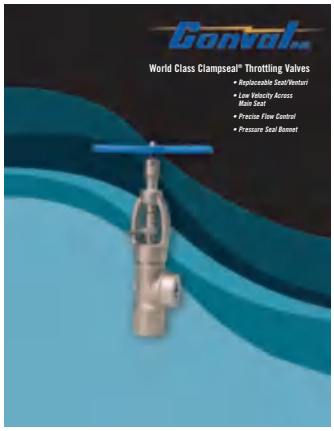

Ask about our growing line of product brochures, available in hard copy or electronic pdf file format.

常州原见能源科技有限公司
oriseen.cn

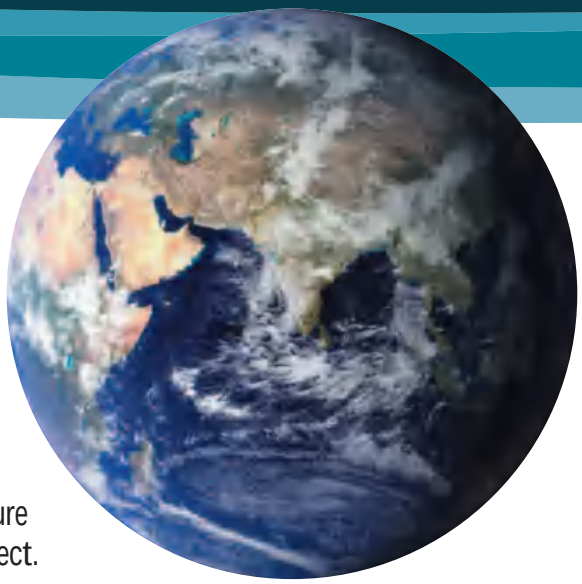

The Conval Story

In 1962, Mr. Chester Siver completed designs for a revolutionary line of high-pressure, forged steel valves. Hamilton Standard (now Hamilton Sunstrand), a division of United Technologies Corporation, was asked to use their then-new Electron Beam Welding technology for joining of parts into valves for subassemblies. Hamilton Standard became intrigued with the valve as an ideal application of the Electron Beam Welding technique, and negotiated a contract for the rights to manufacture and sell the valve. Mr. Siver served as manager of the valve project.

The first CLAMPSEAL® valves were introduced to the market by Hamilton Standard in 1964. However, in the mid-1960's, growing demand for the firm's popular aerospace products forced Hamilton Standard to make the decision to abandon its industrial products projects. The rights to the CLAMPSEAL valve reverted back to Mr. Siver. Since CLAMPSEAL valves were born in Connecticut, Mr. Siver founded "Conval" (short for Connecticut Valve) in 1967. Today, the valves are still manufactured in Connecticut, a state with a longstanding reputation for technological innovation and manufacturing excellence.

Conval is celebrating its 40th anniversary in 2007 with the launch of the new Camseal Ball Valve. Conval has grown into a leader in valves for the world's most demanding applications. We have a global team of experts to help to meet your most challenging needs. We invite you to contact us today.

High-pressure, high-temperature ball, bellows, bonnetless, check, gate, globe, throttling, and urea service valves for the world's most demanding applications.

1967-2007
Celebrating 40+ years of excellence!
Thank you for your business.

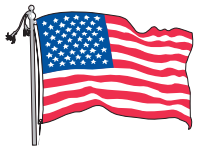

MADE IN USA

ISO 9001 certified since
September 11, 1992

Conval INC.

World Headquarters: 265 Field Road P.O. Box 1049, Somers, CT 06071-1049 USA
Phone (860) 749-0761 Fax (860) 763-3557
e-mail: sales@Conval.com www.Conval.com

Conval's policy is one of continuous development and improvement. Every effort is made to produce up-to-date literature but this catalog should not be regarded as an infallible guide to current specifications and does not form part of any contract. Conval reserves the right to make product improvements and changes without prior notice.

Form ClampsealCatalog2008-KIT Printed in USA
All registered trademarks and trademarks are the property of their owners.

常州原见能源科技有限公司
oriseen.cn